STRUCTURAL MAINTENANCE OF CEMENT CONCRETE PAVEMENTS
ASSESSMENT OF PRESENT IDEAS - RESULTS OF FRENCH EXPERIMENTS

François Verhée, Service d'Etudes Techniques des Routes et Autoroutes, Division des Chaussées

Portland cement concrete pavements in France are of the nonreinforced, nondoweled type and are subject to very heavy traffic. This paper deals with the maintenance of pavements built prior to 1974 and whose structure does not incorporate certain recent design features such as lateral drainage. The pavements concerned can be placed in four categories according to their structural condition (from good to very poor condition). There are three types of structure maintenance corresponding to these different conditions. These are described in the paper along with the specific maintenance techniques applicable to each category. (1) Routine maintenance designed essentially to ensure proper pavement sealing. (2) "Medium" structural maintenance involving such techniques as lateral drainage of slab edge, reconstruction of shoulder edge without drainage, grouting under slabs, improving load transfer at joints (by joint blocking or keying), bituminous overlays (thinner than or equal to 15 cm). (3) Heavy maintenance consisting either of thick bituminous overlays or reconstruction in portland cement concrete of degraded lane only. Only the load transfer improvement techniques are not yet operational. Maintenance techniques to be used are determined on the basis of observed pavement deterioration. The choice may be bituminous overlays which modify the pavement structure, or maintenance for correcting the defects while conserving a cement concrete structure.

Cement Concrete Pavements in France - Structural Problems Encountered (1,5)

Traffic Structures (Figure 1)

The great majority of French cement concrete pavements concerned by structural maintenance are superhighway pavements dating back 10 to 20 years. The slabs are 5 m long (on the average), 7.5 m wide (with longitudinal joint in the middle), 25 cm thick with reinforcement or dowels. The contraction joints are sawn, skewed at 1/6.

These pavements presently carry 20,000 and sometimes even 100,000 vehicles per day (both directions together), 10 to 20 percent of which are trucks. The legal axle weight is 13 metric tons.

Figure 1. Typical cross-section of pavements studied (one-way, two superhighway lanes). Main defects encountered. (Pavement built before 1973.) (Cement or slag treated base, CTB.)
1 - Cement or slag treated base - Insufficient thickness or surface quality; 2 - Water trap; 3 - Sealing defects; 4 - Shoulder (CTB); 5 - Slab.

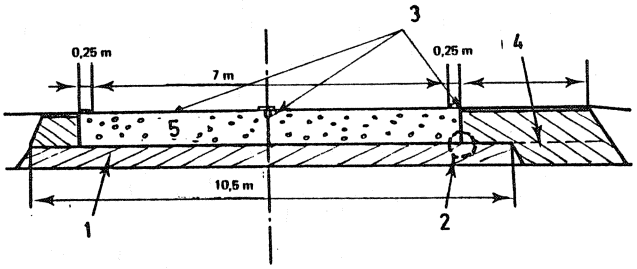

Nature, Causes and Extent of Structural Problems

The Problems Encountered are the Classic Problems of Cement Concrete Pavements. Presence of water in structure, pumping with discharge of fine materials, degradation of shoulder edge, slab faulting (problem relatively infrequent in France), and slab cracking.

Causes.

1. The presence of water results from inadequate waterproofing of the pavement and from the design principle of the structure, which forms a water trap at the most sensitive location (bottom corner of slab on truck lane).
2. Subbase thickness and surface quality defects (facilitating erosion in the presence of water) were found to be the primary causes of the premature evolution of certain concrete pavements.
3. The treated shoulder base at the edge of the slab, of poor quality owing to the difficulty of compacting at this location.

Note: Recent pavement structures have been modified

on the basis of the defects indicated above (1).

Extent of Structural Problems (5)

Four types of structural conditions have been defined on the basis of degradations observed and the results of nondestructive testing. Their characterization is not examined here. Their definition is reviewed in Table 1.

In 1978, out of 850 km of pavements concerned:

1. 340 km corresponded to condition 1: good condition (40%).
2. 330 km corresponded to condition 2: average condition (39%).
3. 120 km corresponded to condition 3: poor condition (14%).
4. 60 km corresponded to condition 4: very poor condition (7%).

Three types of maintenance could correspond to these different conditions:

1. Routine maintenance consisting in particular of ensuring the waterproofing of the pavement.
2. "Medium" maintenance which concerns pavements whose evolution has just begun. These techniques are aimed at improving pavement drainage or restoring the shoulder if drainage is not possible and improving load transfer or limiting the deflections.
3. Heavy maintenance, which is intended for roads in poor condition.

Routine Maintenance (Operational)

Routine maintenance consists essentially in ensuring the waterproofing of contraction joints and in certain cases of the median. At the present time, the waterproofing of joints is redone every 5 years. The completion rate is about 2000 to 3000 m of joints per day and the cost is $3 (12 FF)/m.

Fatigue Testing Equipment for Joint Waterproofing Products (6)

All the tests and observations carried out in the field have shown that the conventional tensile tests generally conducted at relatively low speed are not sufficient for selecting satisfactory products. Slab deflection at a high frequency appears to be an essential cause of the loss of joint waterproofing. Accordingly, a fatigue testing machine has been developed to take these stresses into account.

Description (Figure 2)

Principle. The specimens consist of sealing compound poured between two concrete blocks. The testing machine comprises a fixed part and a moving part. On each part are fixed one of the concrete blocks of the specimen. Joint spacing and deflection are obtained by adjusting the moving part.

Possibilities. Joint width, 5 to 15 mm. Joint opening and closing, up to 6 mm. Deflection frequency, 0 to 30 Hz. Temperature, -20°C to +40°C. Measurement of shearing force if joint is under tension. Relative deflection, up to 1 mm. Six specimens can be tested simultaneously.

First Results

The very first results confirm the assumptions made regarding the effect of deflections. At -20°C, certain products though acceptable if one refers to the specifications break after a few thousand deflections of 1 mm. Other more elastic products undergo 8 million deflections without too much trouble.

The effects of the application conditions are considered to be of great importance and will be investigated soon.

Figure 2. Fatigue tester for joint sealing products. The duration of a test for 8 million cycles, representing the effect of 10 years of traffic of 2000 trucks per day, is one week.
1 - Drive table; 2 - Joint product; 3 - Concrete blocks; 4 - Attachment bracket; 5 - Gages (semiconductors); 6 - Blade equipped with gages (force transducer); 7 - Blade; 8 - Carriage; 9 - Blade; 10 - Screw; 11 - Baseplate; 12 - Hydraulic actuator.

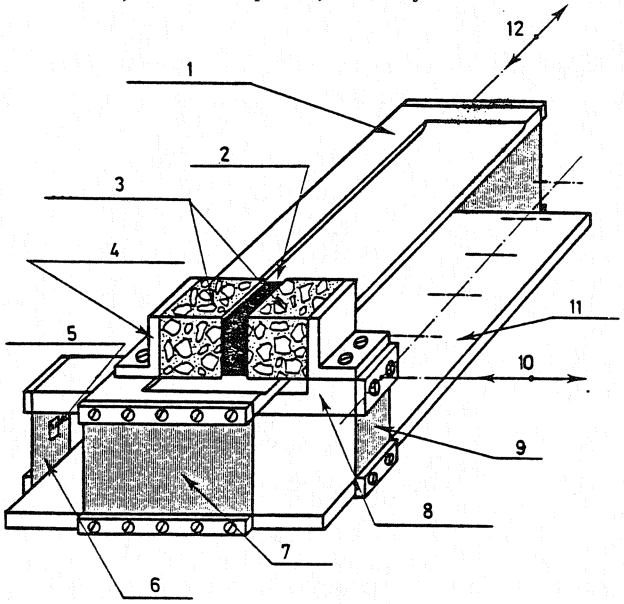

"Medium" Maintenance Work: Operational and Experimental Processes

Lateral Drainage of Slab Edge by Drainage Trench (operational) (7)

Purpose. The drainage trench has three functions:

1. Eliminate the water trap formed by the initial structure (Figure 1). To be effective, the device should have a very high permeability. On the other hand, high permeability leads to a greater risk of fine particle entrainment.
2. Not contain free fine materials whose movement could cause or accelerate faulting.
3. Provide user safety by preventing settlements or pumping sites between the shoulder and the slab.

Experimentation. Among the different experimental work, the results of two are particularly significant:

Drainage Trench on a Very Degraded Pavement (cutting the subbase) (Figure 3) (2).

Figure 3. Section of an experimental drainage trench set up on a highly deteriorated superhighway section. After the completion of this trench, the degradation phenomenon was accelerated. This can be attributed to the trenching of the extra width of the subbase, to the disturbance of the structure on the slab edge and to the possibility offered for the removal of infiltration water (thereby increasing the erosion and accelerating the removal of fines).
1 - 28-cm slab; 2 - Bituminous mix; 3 - Shoulder; 4 - Cement-treated material; 5 - Film placed against concrete slab; 6 - Polyane film; 7 - Sand; 8 - 160mm dia. drain; 9 - Washed gravel 5/12; 10 - 22-cm subbase; 11 - Fine sand; 12 - Natural soil; 13 - Cement and slag treated material.

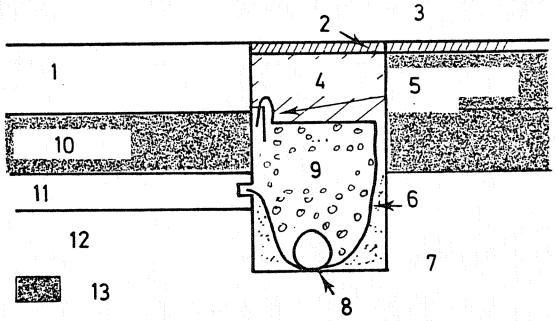

1. Main characteristics of pavement. Traffic, 70000veh/day. Deflections, 0 to 0.5 mm. Faulting, 4-5 mm average. Cracking, 2 percent (zero in the nondrained control zone). Joint waterproofing, none. Totally eroded slab-subbase interface.

2. Observations on the drained pavement 16 months after the work. As regards hydraulic performance: (i) average response time 16 min (from 5 to 60 min), (ii) average drainage time 3 h (from 1 h 45 min to 4 h 50 min, and (iii) drained-water/rainfall ratio 68 percent (41 to 85 percent). As regards mechanical performance (see following table), transverse and longitudinal cracks appeared rapidly in the drained zone. Deflections increased from 0.2 to 0.6 mm, whereas the deflections of the nondrained control zone remained equal to 0.2 mm. Longitudinal cracks are certainly mainly due to the elimination of the extra subbase width.

Evolution of Cracking Rates

Observation Time	Drained Zone	Control Zone
Beginning	2%	0%
16 months	40%	17%

3. Conclusions. The following are highly disadvised: (i) trenching on the extra width of the subbase under the slab, and (ii) setup of drainage trenches on an excessively degraded pavement because this work accelerates the removal of fine elements and hence the degradation of bearing conditions.

Drainage Trench Equal to Slab Thickness on Pavement Exhibiting Little Degradation (Figure 4).

1. Main characteristics of pavement. Traffic, 3900 trucks/day on most heavily loaded lane. Small slab deflections (92 percent < 0.1 mm). Limited faulting, 1 mm on the average. No degradation.

2. Observations. As regards hydraulic performance:

	Drained Section Without Fabric Film	Drained Section With Fabric Film
Average response time	14 min	39 min
Average drainage time	7 h	8 h
Drained-water/rainfall ratio	47%	20%
Average concentration of suspended matter	221 mg/liter	202 mg/liter

As regards mechanical performance, conditions are the same 1 year later.

3. Conclusions. This effect of the fabric film appears to be rather negative: longer response time, retention of water by a "wick" effect or incipient clogging.

Figure 4. Diagram of drainage device in a shallow trench (not crossing the subbase).
1 - Slab; 2 - Emergency lane; 3 - Subbase; 4 - Fine bituminous materials; 5 - Porous concrete; 6 - 80 mm dia. drain (slits underneath) in shoulder; 7 - Fabric film (for one experimental section only).

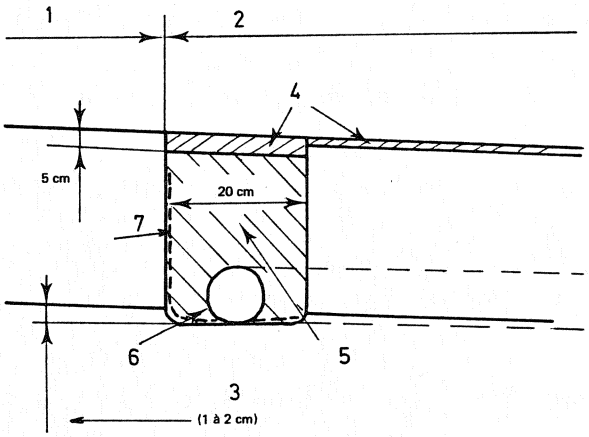

Adopted System (Figure 4). The adopted system is the following:

1. Trench from 20 to 25 cm wide (corresponding to the deteriorated zone of the shoulder) and with a height equal to the slab thickness plus 2 cm to enable it to collect water below the slab level. The depth should not be greater because the base of the shoulder is generally in good condition and the structural contribution of the extra base width would then be removed, thus liable to cause rapid

degradation of the structure,

2. Absence of fabric film between slab-subbase interface and drainage trench because its filtration capability is questionable and can sometimes extend the water flow time.

3. Drain (slits underneath, at bottom of trench) providing a water path (especially for small slopes).

4. The trench is filled with porous concrete (cement proportion, 150 kg per cubic meter; porosity, 15 to 20 percent). This material provides not only excellent shoulder bearing capacity, but does not free any fines owing to its cohesion.

5. Covering with bituminous concrete from 3 to 4 cm thick.

6. Outlets of the same structure are provided every 30 to 50 meters depending on the slope angle and existing drainage arrangements.

Results. Lateral drainage is used with caution because it may accelerate the pavement degradation by increasing the removal of fine elements. It is to be ruled out on pavements having excessive pumping, particularly if the subbase is erodable or if the subgrade contains mobile elements.

1. The drainage trench can be set up at the rate of 1 kilometer per day.

2. Its cost is about $25 (100 FF)/meter.

3. During the work, only the slow-traffic lane is closed off. It is opened again as soon as the porous concrete has hardened.

4. Effectiveness. After 3 to 4 years' experience: (i) no further rising of water along the slab-shoulder joint, and (ii) after a slight increase, corresponding to the removal of fines attributable to the construction work, slab deflections become stabilized. It is thus possible to expect a reduction or a substantial slowing of pavement degradation.

Reconstruction of Shoulder Without Drainage (Operational)

Purpose. The reconstruction of shoulders without drainage is intended for pavements for which a drainage trench has too many risks, and its purpose is to:

1. Ensure user safety.

2. Avoid providing a source of fine elements for pumping.

3. If possible, contribute to the mechanical strength of the pavement, especially as the pavement is generally more subject to damage than one with a drainage trench.

Experimentation - Adopted System (Figure 5).

Principle. The principle consists in removing the deteriorated material of the shoulder and replacing it by a good quality material. The chosen material is cement concrete because of its easy placement and its ability to provide mechanical strength.

Results of First Tests. Filling the trench down to 21 cm with cement concrete, with a bituminous concrete surface 4 cm thick, as compared with total filling with cement concrete, only contributes further constraints (completion time, compaction difficulty). Transverse cracking (which is located preferentially around transverse joints) could raise a problem (significant spalling, relative movements).

Figure 5. Section adopted for reconstruction work without drainage on the edge of the shoulder. Four stringers were added to limit problems due to cracking.
1 - Slab; 2 - Trench; 3 - Four 8-mm stringers; 4 - Old shoulder structure; 5 - Poured repair concrete; 6 - Subbase; 7 - Concrete slab; 8 - Joint.

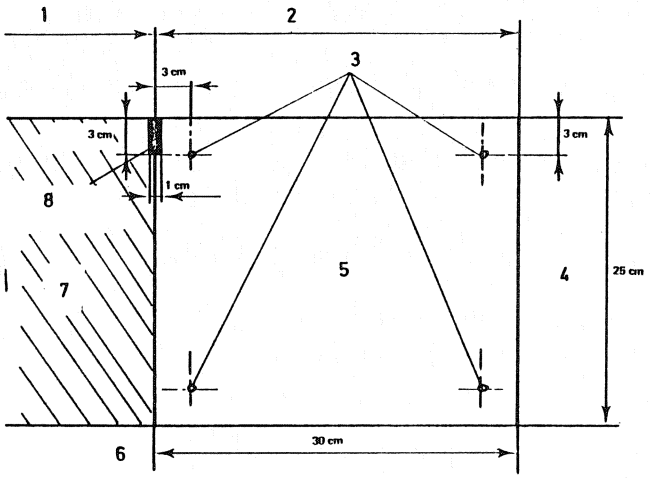

Adopted System (Figure 5). The reconstruction is carried out as follows:

1. Digging a trench in the shoulder along the slab, with a width equal to the deteriorated area (about 30 cm) across the thickness of the slab. This work is carried out with a trenching machine.

2. Removal of remaining material by means of a vehicle and vacuum system.

3. Placement of concrete (300 kg of cement per cubic meter, accelerator, air entraining agent) by slipform paver, placing four longitudinal irons of 8-mm diameter to limit the movements at the location of the transverse cracks. Drying time is 48 hours.

4. After setting, the longitudinal joint between the slab and the shoulder is sawn and sealed.

5. Operating conditions are the same as those of the drainage trench.

Additional Tests. The system is quite costly, in an initial assessment, without contributing much from the structural viewpoint. Therefore, experiments on the connection between the beam thus formed and the ends of the slab on each side of transverse joints were carried out in order to attempt to use this beam as a load transfer device. The connection was provided by four 26-mm diameter expansion pins, the beam moreover being reinforced at this location by stirrups. After the work, deflections had been reduced by one-half, and after 15 months by one-third. However, after 2 years, their level was the same as in untreated zones. This loss of effectiveness is due to an increase in play at the level of the pins. Better pin sealing could certainly improve this result.

Results.

1. Placement rates and the cost of reconstructing the shoulder are of the same order as those of the drainage trench: 1 km/day, $30 (120 FF)/meter.

2. This technique, applied particularly to sections exhibiting significant pumping yields, after 3 years' observation, good performance in terms of

the goals set: user safety and absence of fines,

3. From the structural viewpoint, the contributions appear to be more limited even though only medium-term observation will allow an evaluation,

4. Using the presence of this longitudinal beam to improve load transfer is an interesting subject of investigation.

Limitation of Deflections by Grouting Under Slab (Operational)

Purpose. Grouting under the slab is used in France essentially to stabilize the slabs by filling the cavities between the slab and the subbase when the latter has become eroded. Its use is consequently limited to the slow-traffic lane in most cases. The lifting of settled slabs is very rarely accomplished by injection.

It is necessary to inject fairly limited amounts of grout (a few tens of liters per joint) in volumes having the form of a blade with a maximum thickness of a few millimeters.

Experiment. Experimentation was aimed essentially at the high-output application of the technique by limiting the completion times.

Use of Radioactive Tracers (4). Radioactive tracers were used on several experimental projects to locate the cavities to be grouted, check the propagation of the slurry into these cavities and estimate its thickness if necessary. The procedure is the following:

1. During a first phase, injecting marked water to delimit the cavities in a plane.
2. During a second phase, injecting the grout properly so-called (also marked) and following its propagation. The grout thickness is estimated after the calibration of the counts.

Grout. The grout must be fluid and stable, and must rise rapidly in strength to allow rapid reopening to traffic. It must also withstand the stresses induced by traffic. A grout meeting these requirements has been developed. Its composition is as the following:

1. CPALC 400 cement (cement with at least 70 percent clinker + slag + flyash, with 28-day compressive strength higher than 40 MPa): 100 kg/m^3.
2. Water: 43 liters/m^3.
3. Bentonite: 2 kg/m^3.
4. Accelerating agent: 2.5 to 4.5 kg/m^3 depending on temperature.

Considering the temperatures encountered on jobsites, this grout practically requires the discontinuance of traffic on the treated lane for 48 hours (24 hours for the work and 24 hours for drying).

Characteristics	Results	
	Obtained in Laboratory	Obtained on Jobsite
Marsch fluidity		
. At discharge from mixer	14.4 s	13 s
. After 30'	16.6 s	
Bleeding after 3 hours	0.8%	0.3%
Set - Start	3 h 30 min (7 h at 5°C)	
- End	6 h 15 min (11 h 45 min at 5°C)	
Compressive strength		
. After 24 h	16.5 MPa	
. After 7 days	42.6 MPa	40.3 MPa
Bending strength		
. After 24 h	3.4 MPa	
. After 7 days	5.9 MPa	8.2 MPa

Methodology. Up to the present time, the method used for filling the cavities was similar to that used for slab raising. It is costly and slow. Reconsidering the problem, in particular by means of radioactive tracers, a new methodology is reversing this trend. It consists in limiting the injection of grout to the locations at which it is necessary, i.e. on each side of the transverse joints.

1. Description. Two grouting holes of 40-mm diameter (allowing the use of quick clamping injectors) are bored with a wagon drill on the transverse joint, about 50 cm from the longitudinal joint and the slab edge. The holes are blown out with compressed air. Grouting is carried out by gravity or under low pressure (0.4 to 0.5 MPa maximum) until the grout flows out of the joints or after 2 minutes of refusal.

2. Comparison of the two methods.

	Grouting through 4 to 5 holes within slab		Grouting through 2 holes on joint	
Distribution of grout	Under almost all the slabs		Preferentially in the cavities on each side of the joints	
Grout thickness			Thinner than in the case of 4-5 holes	
Grout consumption	Highly variable; 200 liters/slab on average		100 liters/slab on average but losses through joints	
Effectiveness with respect to deflections (for a given job): average classes (the higher the figure, the greater the deflections)	Approach Slab	Leave Slab	Approach Slab	Leave Slab
. Before work	4-5	3-4	4-5	4-5
. After work	2-3	1-2	0-1	0-1
. 1 year	2-3	1-2	2-3	0-1

The new method distributes the grout better in relation to the problem to be treated, consumes less grout and is just as effective if not better than the conventional method in the short term.

3. Results. The production of 1 km/day, or 200 joints/day, can be achieved with an ad hoc organization (instead of 100 to 200 m/day with the

conventional technique). The cost is divided by 2 to 3 ($6 or 30 FF/m of lane). Traffic is interrupted for 2 days. Short-term effectiveness is good and medium-term performance should be at least equivalent to that of conventional grouting which is moreover quite variable. Deflections are brought to about 0.2 mm after the work. Under-slab grouting has thus become an operational maintenance technique for this application.

Improving Load Transfer at Joints (Techniques Under Experimentation)

Research on these techniques is aimed at limiting the relative deflection of slabs.

Joint Blocking by Epoxy Resin Injection.

Principle. Load transfer is a function of the opening of the joint crack. Blocking consists in compensating for hydraulic shrinkage, and even more if the risk of blowup under high temperatures is acceptable. Load transfer is thus improved by reducing the joint crack opening.

Procedure. Epoxy resins (accelerated where necessary) were adopted during an initial phase because of their adherence to concrete (if the latter is sufficiently clean), possibility of diffusion in a fine crack, and compressive strength.

Seven to eight holes of 18-mm diameter are drilled on the transverse joint of the treated lane (slow-traffic lane). The resin is injected with a mixing gun having a special fitting. The injection pressure can reach 1.4 MPa and the average amount injected is 2.5 liters/joint of 3.5 m. The setting time varies depending on weather conditions and on the resin from 3-4 hours to 24 hours.

Results. Blocking can contribute nothing on pavements already highly deteriorated.

After the work, deflections are significantly attenuated and load transfer is excellent: there is pavement continuity. During the first winter, the resin cracks: deflections are then like those of a narrower crack (shifting of deflection values as a function of temperature corresponding to a variation of 5 to 10°C). All the deflections in a work section are more uniform, as crack opening is more regular.

The risk of blowup, within the French context, with work carried out between 5 and 15°C is very limited.

Application Constraints. This technique involves rigorous application conditions:

1. Temperature sufficiently low so that the crack is open (lower than 15°C and if possible lower than 10°C).
2. Temperatures must however be sufficiently high to allow fairly rapid polymerization: A $\geq$ 5°C.
3. Dry crack.
4. Limited slab curling so that the blocking is done by a film of resin over the entire surface of the crack.

The programming of such work is thus very delicate. This is what presently limits the extension of this technique.

Keying

Principle. Keying consists in placing metal devices on the transverse joint so as to allow free longitudinal movement while transmitting vertical movements from one slab to another. It is distinguished from doweling after construction, by the possibility of easier and faster placement at an acceptable cost.

The basic system adopted is the following:

1. Drilling of cylindrical holes on the transverse joint of the treated lane (truck lane, 3.5 m wide).
2. Placing of "figure-8 shaped" keys (Figure 6).

The adherence between the keys and the two concrete semi-circumferences of the boreholes should make it possible to transmit vertical movements.

Experimented Devices

1. First device: glued metal key. The keys in plain mild steel (yield strength of 250 MPa/cm^2) are made by cold drawing and sandblasted to ensure good bonding of the glue. They are 70 mm in diameter, 4 mm thick and 240 mm high. The keys are coated with epoxy resin and then inserted into the drilled holes.

Figure 6. Keying: key and arrangement on joint. The adopted shape allows free longitudinal movement while ensuring the transmission of vertical movements. The cylindrical hole is made by rotary percussion drilling.

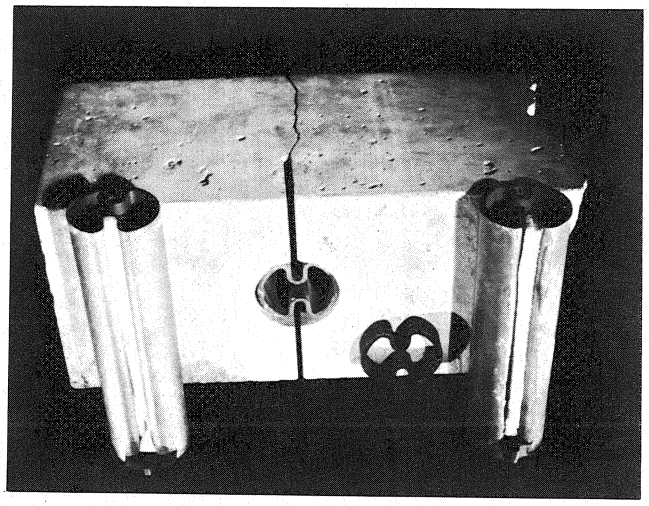

2. Second device: stressed key. Initial tests showed the difficulty of obtaining proper glueing owing to the application conditions. A system bringing about adherence by the rubbing of the key on the concrete has been tested. It consists (Figure 7) in filling the key described above with an elastomer having a hollow in the middle, placing the key in the drilled hole, and inserting into the hollow of the elastomer a metal insert of larger size which thus places the assembly under compression. It was found that additional glueing was useful.

Experimental Results. With a key thickness of 4 mm, the immediate effectiveness is good except on pavements in very poor condition (Figure 8). However, after the first summer, the stiffness of the key and the extensibility of the joint are such that the

Figure 7. Key stressed after insertion. The introduction of the insert having a diameter larger than the hole of the neoprene places the entire system under compression. This compression makes it possible to obtain the vertical adherence necessary between the key and the concrete.

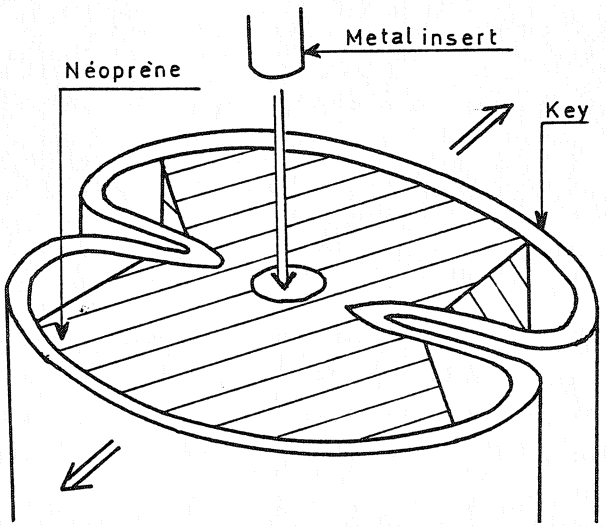

elastic limit of the key (0.5 to 0.8 mm for 15 to 20 t of thrust) is exceeded with the first cold weather; the glueing then fails.

Figure 8. Deformation of slab ends at a joint before and after keying. After keying, the transmission of deformations is perfect.

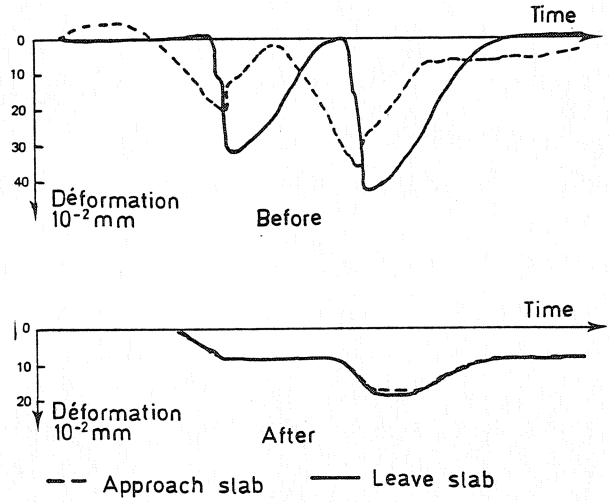

To overcome the lack of elasticity, the thickness of the stressed keys was reduced to 1.5 mm. Under these conditions, good transformation of deformations was observed on the pavement from one slab to another but with a slight delay. This demonstrates the deformability of the joints for this small thickness of metal.

The rotary percussion drilling used creates a concrete embrittlement zone on the surface of the drilled holes and frequently a cone at the bottom of the hole.

Concluding, the principle of keying remains of value from the viewpoint of its mechanical effectiveness as well as with regard to the possibility of high output application (high working rates possible, cost much lower than doweling after construction: estimated cost $20 to 25 (80 to 100 FF)/key. However, dimensioning still has to be defined and appears to be particularly delicate. Good quality drilling (in particular strength of concrete on hole surface) should be an easier problem to solve.

Resurfacing with a Bituminous Mix (Thickness $\lesssim$ 15 cm)

Purpose. This type of resurfacing is intended for pavements exhibiting an average deterioration, in certain cases with high slab deflection levels. In the latter case, prior stabilization by grouting is often carried out. It modifies slightly the behavior of the structure (limitation of slab movements (curling, expansion-contraction)) when it exceeds 10 cm. It makes the pavement impervious and restores evenness where necessary.

Experimentation and Projects

Comparison of the Performance of Special Bituminous Mixes and a Pure Bituminous Mix. The experimental section is subjected to pumping. Deflections vary from 0.1 to 0.5 mm. Traffic represents 25,000 vehicles per day. The following are compared:

1. 8 cm of bituminous concrete 0/14 with 5.8 percent pure bitumen.
2. 4 cm of bituminous concrete 0/10 with 6.2 percent bitumen with SBS polymer addition.
3. 4 cm of bituminous concrete 0/14 with 7.5 percent pure bitumen + 1.5 percent asbestos fibers.

The equivalent thicknesses take into account the performance of the materials and their cost.

The two improved binder bituminous mixes are totally recracked after a year under the effect of slab deflections and thermal movements. Their condition was such that it was necessary to remove them by grinding. The conventional 8 cm of bituminous concrete exhibited two incipient cracks for 19 joints.

The following may be concluded from this test: resurfacing thickness plays a primary part with respect to the appearance of cracks; 8 cm of bituminous concrete with pure bitumen constitutes a minimum resurfacing thickness.

Performance of Bituminous Concrete in Thicknesses of 10 and 14 cm. The pavement exhibited deflections of from 0.1 to 0.5 mm before stabilization by grouting. After this work, 14 percent of the joints had deflections greater than 0.3 mm. Traffic is about 50,000 vehicles per day. 0/14 bituminous concrete with pure bitumen (5.6 percent) was used in thicknesses of 10 and 14 cm.

After 3 years, among the 100 joints, three cracks appeared (in the thickness transition zone) as well as slab-shoulder cracking at the same location. The behavior may be regarded practically as good.

Work. Recent resurfacing work was carried out, while awaiting the construction of a new wearing course after a period of 6 or 7 years when the cracks reappearing will call for repairs. This decision was made for operational reasons because such a resurfacing operation, in addition to the prior grouting work, can easily be accomplished at the rate of a kilometer per day. For this project, there

were no problems of bridges (loads, gage). The extent of deflections was medium (20 percent greater than 0.4 mm).

Almost all the slabs of the truck lane had been previously grouted. The bituminous concrete cover has a thickness of 8 to 10 cm. The shoulder is also resurfaced.

Results. Resurfacing with 10 to 15 cm of bituminous mix after slab stabilization at a deflection level of 0.2 mm is a maintenance alternative suited to pavements of average deterioration (condition 2 or 3). It calls for allied work which is sometimes significant: raising of crash barriers and surface draining devices, modification of bridges in certain cases. The shoulder and the high-speed lane, which generally do not require work, are also resurfaced. This operation implies the need for periodic placement of a new bituminous layer owing to the transmission of cracks.

The placement rate can be very high (higher than 1 km/day) which is important in certain traffic areas. The cost may vary from $225,000 to $300,000 (0.9 to 1.2 million FF) per km depending on the number of lanes and jobsite conditions.

Heavy Maintenance (Operational)

The pavements concerned by heavy maintenance are those which reach a very advanced degree of deterioration characterized in particular by their level of transverse cracking, often much greater than 10 percent.

Two techniques used in France for the repair of highly deteriorated pavements are (i) thick overlays and (ii) reconstruction with cement concrete. These two techniques are both operational and will be described below.

Thick Overlays

Pavements Before Work. This technique was applied on pavements over 30 years old. Their structure was different from those described above in the Traffic - Structures section.

1. Subbase, 8 cm of sand.
2. Concrete slab, 24 cm thick, 7 m wide (with longitudinal joint), 12 to 18 m long, and light reinforcement.
3. Former maintenance following transverse cracking: after 20 years, cement grouting + 9 cm of bituminous material, and then maintenance of cracks all of which reappeared.

Existing highway structures and bridges do not raise any clearance or loading problems in the case of thick overlays.

Types of Overlays Used - Results. After preparatory work consisting chiefly of the cement grouting under all the slabs of the low-speed lane, a 24-cm base of asphalt-treated material (3.5 percent binder) was placed during the first work phases, along with an 8-cm bituminous concrete wearing course.

It was found that the placing of the asphalt-treated material containing fully crushed elements is achievable up to thicknesses of 20 cm. Beyond this value, compactness at the bottom of the layer drops. After 6 years, performance is excellent on both 24-cm and 20-cm overlays (no cracking).

Technique Presently Used.

Preparatory Work. Any problem related to structures: strengthening for loads, raising for clearance. Grouting under slabs of truck lane, the deflections of which are greater than 0.2 mm.

Overlay. 20 cm of asphalt-treated material plus 8 cm of bituminous concrete.

Allied Work. Resurfacing of shoulder and raising of crash barriers and surface drainage devices.

Jobsite Conditions. The work was carried out with traffic interrupted. Not including the preparatory work, production rates are about 1 km/week. For all the work taken together, the cost varies from $375,000 to $500,000/km (1.5 to 2 million FF/km).

Reconstruction with Cement Concrete

Reconstruction of Truck Lane (and if necessary middle lane) with Cement Concrete (3). Up to the present, only dual three-lane heavily traveled pavements have received this type of treatment. Two main cases may arise:

1. The pavement has proper structural characteristics (thickness of courses, quality of materials) and is deteriorated by "normal" fatigue. In this case, generally only the slow-traffic lane is deteriorated.
2. The pavement structure has defects. It is then possible that the middle lane, which also receives a significant amount of truck traffic (10 to 15 percent of total traffic) also has to be reconstructed. This case was encountered on a pavement where the subbase surface was deteriorated over its entire width.

In every case, the high-speed lane, which carries only light vehicle traffic, is in excellent condition and does not require work.

Reconstruction Technique

Structure (Figure 9). Reconstruction consists in demolishing the old deteriorated lane and in rebuilding a new lane with better design features, namely extra slab width, subbase of excellent quality, especially as concerns nonerodability, and lateral drainage through shoulder.

Method. Reconstruction takes place as follows. Demolition and removal of part or all of the shoulder depending on the type of lateral drainage selected. Demolition and removal of concrete slabs. Demolition and removal of subbase. Placement of a subgrade by adding material or treating in place. Placement of subbase in lean concrete. Installation of transverse tie bars in the slabs of the lane remaining in place. Repair of spalling on lanes remaining in place. Placement of concrete wearing course. Completion of lateral drainage and shoulder (notably with porous concrete).

After crushing, it is possible to use again the demolished wearing course concrete as coarse or medium aggregate for the subbase concrete and the porous concrete, allowing a significant saving.

TABLE I - MAINTENANCE PROCEDURES ADAPTED TO THE TYPICAL CONDITIONS OF "OLD" PAVEMENTS

TYPICAL CONDITIONS	DEFECTS OR DETERIORATION	MAINTENANCE PROCEDURES	SERIES OF PROCEDURES BEST SUITED	OBSERVATIONS
Pavement 1 (good condition)	Water infiltration into pavement	Sealing (1)	Sealing (1) + Drainage trench	The structure has to be adapted by draining it. - This maintenance is now achievable; all the procedures are operational. - The risk of the entrainment of fines through the drainage trench is not high and the removal of water should be substantially faster.
Pavement 2 (medium condition)	Infiltration of water into pavement	Sealing (1) Drainage trench	Sealing (1) + or Drainage trench Reconstruction + (2) Grouting (keying-blocking) or Resurfacing with stabilization	(2) The absolute need of rapidly removing the water entering the structure can conflict with the entrainment of fines. Choice to be made according to pavement.
	Shoulder (settlement, crazing, cavities)	Drainage trench or shoulder reconstruction		
	"Medium" pumping - Deflections: 0.3 mm - Discharge of fines - Water present long time after rain	Sealing (1) Drainage trench or shoulder reconstruction Grouting (keying-blocking) or Resurfacing with stabilization		
Pavement 2a + defect of interface or subbase	Water infiltration into pavement	Sealing (1)	Sealing (1) + Shoulder reconstruction + Grouting (keying-blocking) or Resurfacing after stabilization	
	Shoulder	Shoulder reconstruction		
	Defect or interface or subbase	Grouting (keying-blocking)		
	"Medium" pumping - Deflections: 0.3 mm - Discharge of fines coming notably from surface of subbase - Water present long time after rain	Sealing (1) Shoulder reconstruction Grouting (keying-blocking or Resurfacing after stabilization		
	coming notably from surface of subbase - Water present long time after rain	blocking or Resurfacing after stabilization		
Pavement 3 (poor condition)	Infiltration of water	Sealing (1) Drainage trench	Sealing (1) + Shoulder reconstruction + Grouting (keying-blocking) + Mid-slab sawing (4) or Overlaying after stabilization	
	Shoulder	Shoulder reconstruction		
	Defects of interface or subbase	Grouting (keying-blocking)		
		Sealing (1) Shoulder reconstruction Grouting (keying-blocking) or Overlaying after stabilization		
	Cracked slabs	Repair of spalling Repair of slabs presenting a danger		
	Transverse cracking highly advanced	Mid-slab sawing of uncracked slabs (3)		
Pavement 4 (very poor condition)		Partial reconstruction or thick overlaying after stabilization	Reconstruction of deteriorated lane(s) or thick overlaying after partial restoration	The maintenance decision should be based in particular on the evolution of multiple cracking.

(1) The term sealing implies the reconstruction of contraction joints, the sealing of the longitudinal joint between the slab and shoulder during the restoration of the shoulder or the setup of a small drainage trench, the analysis of pavement drainage and, if necessary, additional measures such as the sealing of the median or the setup of longitudinal drains on the edge of the slab on the median side.

Results. The oldest reconstruction of this type dates back 4 years. It is thus too early to form an opinion as to its quality. In fact, its performance should be the same as a new pavement.

The work carried out makes it possible to consider this technique as operational and applicable even when there are major traffic constraints. In two consecutive years, two reconstruction projects of 8.5 km each were completed in 2 months, including the concrete hardening time. The cost of this type of work is $375,000 to $500,000/km (1.5 to 2 million FF/km). Reconstruction required the use of at least one other lane, in addition to the repaired lane(s), for jobsite vehicles.

Figure 9. Cross-sections of two reconstructed lanes. 1 - Median; 2 - High-speed lane; 3 - Middle lane; 4 - Slow-traffic lane; 5 - Shoulder; 6 - Bituminous concrete; 7 - Cement treated material; 8 - Fine sand; 9 - Concrete; 10 - Bituminous concrete; 11 - Lean concrete; 12 - Treated soil; 13 - Porous concrete; 14 - PVC drain, dia. 80 mm; 15 - Tie bar.

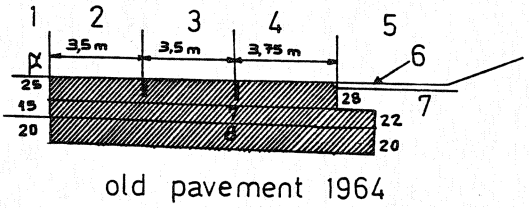

old pavement 1964

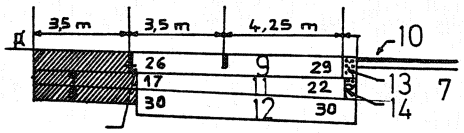

Cross section 1976

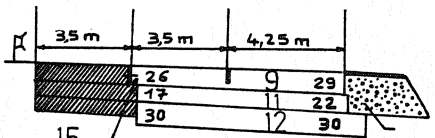

Cross section 1977

Choice of Type of Heavy Maintenance

The two techniques have the following advantages and drawbacks:

1. Thick overlays with bituminous materials: extensive allied work; overlaying of high-speed lane and shoulder which do not require it; utilization flexibility with respect to traffic constraints (possibility of reopening to traffic in case of absolute necessity).

2. Reconstruction with cement concrete: uncertainty regarding the behavior of the middle lane when it is conserved; more rigid traffic constraints (no possibility of using the lane as long as the concrete has not set sufficiently, hence slightly longer completion times; use of materials only where needed.

The choice is made on the basis of technical, economic and operating constraints specific to each project.

Outline of Maintenance Programs for Pavements with "Old" Structures (defined in the section dealing with Traffic - Structures) (Table 1)

The maintenance procedures described above were made to correspond with the defects characteristic of each typical condition of pavements having "old" structures.

Of all the techniques, only keying and blocking are still not operational.

Aside from pavements in condition 1 (good condition), for which it is sufficient to adapt the structure by providing lateral drainage, the choice can be made between:

1. Maintenance correcting the structural defects without modifying the type of pavement structure, i.e. conserving the concrete structure.

2. Maintenance modifying the structure by resurfacing the concrete with a bituminous mix; the thicker the bituminous mix, the greater the modification: in the extreme case of pavements of condition 4 (very poor condition), what is involved is a new pavement.

The first type of maintenance has been applied only relatively recently, no more than 4 years. Its effectiveness has thus not yet been confirmed.

The second type of maintenance involves the periodic renewal of the wearing course and the overlaying of the shoulder and high-speed lane which generally do not require this work.

References

1. M. Ray. Conception des chaussées en béton. Les choix actuels en France. Bulletin de Liaison des Laboratoires des Ponts et Chaussées (B.L. - LPC) 91, Septembre-Octobre 1977.
2. J. Cheron and J.P. Christory. Drainage des chaussées en béton - Expérimentation sur l'ancienne chaussée de l'autoroute A1. B.L. - LPC 93, Janvier-Février 1978.
3. P. Merrien and J.L. Nissoux. Les enseignements des deux chantiers de reconstruction de l'autoroute du Nord. B.L. - LPC 96, Juillet-Août 1978.
4. J.P. Belin and J.P. Christory. Contribution des traceurs radioactifs au suivi d'injections de coulis de ciment pour stabiliser des dalles de chaussées en pistes en béton. B.L. - LPC 96, Juillet-Août 1978.
5. F. Verhée. Entretien des chaussées en béton - Bilan des idées actuelles et résultats des expérimentations françaises. B.L. - LPC 97, Septembre-Octobre 1978.
6. G. Hameau and C. Puch. Mise au point d'un essai de fatigue de produits pour joint de chaussées. B.L. - LPC 103, Septembre-Octobre 1979.
7. J.F. Griselin. Le drainage des chaussées en béton neuves et anciennes en France - Bilan après quatre années d'expérience. B.L. - LPC Numéro Spécial VIII, Juillet 1979.