RECENT DEVELOPMENTS IN THE DESIGN AND CONSTRUCTION OF CONCRETE PAVEMENTS FOR GERMAN EXPRESSWAYS (AUTOBAHNS)

Rupert Springenschmid
Technical University of Munich, Baustoffinstitut
Baumbachstrasse 7
D-81245 Munich, Germany

Walter Fleischer
WALTER – HEILIT Verkehrswegebau GmbH, Headquarter
Klausenburger Strasse 9
D-81677 Munich, Germany

ABSTRACT

In Germany, concrete pavements have proven successful for heavy-traffic expressways (axle loads of from 11.5 to 13 t). Their surface offers durable good skidding resistance and develops little noise. Their service life is 25 to 40 years. Old concrete pavements are recycled into crushed aggregates for new pavement concrete or crushed aggregate base courses. The concrete pavements are produced without expansion joints or reinforcement. Transverse joints are arranged every 5 m. Transverse joints are doweled, and longitudinal joints are anchored using tie-bars. Concrete pavements for the highest traffic loads are 260 mm thick if they are placed on a cement-bound base, and 300 mm thick if placed directly on a crushed aggregate base. Slipform pavers are used to place the concrete, normally in two layers.

INTRODUCTION

Around 1888 – at the same time the first automobiles were being manufactured by G. Daimler and C. Benz – a road was constructed with concrete pavement in Breslau (now Wrocław, Poland) for the first time in Germany. Expressway construction, which started in 1934, was of great significance for concrete road construction. Up until the early 1960s, new concrete pavements were mostly being provided with steel reinforcement, with transverse joints spaced 7.5 to 10 m, with expansion joints and on unbound base courses. In 1972, research work performed on warping and curling due to temperature and humidity gradients resulted in a new construction method without reinforcement, without expansion joints and with slabs having a length of only 5 m (Fig. 1). Based on our own experience and on the results of the AASHO-Road-Tests, expressway pavements were then placed on cement-bound or asphalt bases. Slipform pavers were used for the first time in 1978, relatively late compared to the United States. Starting in 1982, expressway pavements were produced over their full width of 11 m using this equipment. The main reason for the relatively late employment of slipform pavers was that dowels and tie bars were considered to be necessary and installation methods had to be developed for slipform construction. During the past two decades, a great deal of research and development work was carried out, which led to improved concrete roads.

Germany is located in the heart of modern Europe with its open borders, which results in very high passenger and freight traffic loads on the road network. The average traffic load of expressways is approximately 8,000 trucks per day, although there are routes with three to four times this freight traffic. The high permissible axle loads of up to 11.5 t for German trucks and up to 13 t for trucks from neighboring countries that also use the German road network subject the road pavements to high stresses. This is why concrete pavements are mainly being selected for the many expressway resurfacing and new construction projects in the new federal states in eastern Germany.

CONSTRUCTION METHODS, DESIGN

The transverse joint spacing of just 5 m and the elimination of expansion joints have proven successful for the following two reasons:

(1) The bending stresses due to temperature and humidity gradients remain low, and
(2) The joints open only very little; this is favorable for load transmission by aggregate interlock and minimizes the stress on the joint filler.

To increase transverse load transmission and to avoid faulting of transverse joints in heavily loaded traffic lanes, steel dowels are installed every 250 mm (Fig. 1). For lanes with less traffic loads, a dowel spacing of 250 mm in the area of the wheel tracks and of 500 mm between them, or of 500 mm throughout are sufficient. The steel dowels have a diameter of 25 mm and a length of 500 mm. A 0.3-mm thick plastic coat provides corrosion protection and reduces the bond to the concrete.

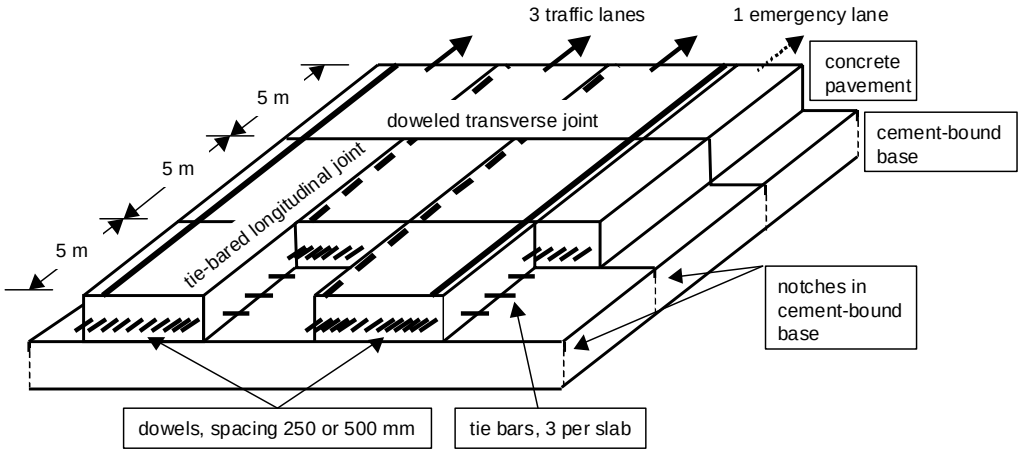

Fig. 1: Typical cross section of a German expressway (Autobahn)

To prevent the longitudinal joints from gradually opening, 800 mm long and 20-mm thick tie bars of ribbed rebars are installed (Fig. 1), which are also plastic-coated at the center for corrosion protection. Every 5 m long slab three tie bars are installed in longitudinal contraction joints and five tie bars in longitudinal construction joints.

Today, the following three alternative designs are used for concrete roads (Fig. 2):

(1) Concrete pavement on cement-bound base
The rigid cement-bound base facilitates delivery and placement of the concrete. A bond is formed between the concrete and the cement-bound base, although it gradually releases at the joints. Penetrating water may lead to erosion of the cement-bound base. To avoid this, a high compressive strength of 15 N/mm² is presently stipulated for the cement-bound base [1]. This involves high tensile strengths of the base, which may cause individual, wide cracks. A cement-bound base with such high strength must therefore be notched. The base breaks underneath the notches, forming a joint. The notches are longitudinally and transversely vibrated into the wet cement-bound base or a concrete saw is used to cut into the hardened base. The cement-bound base has to be notched where a joint will subsequently be cut into the concrete pavement above it (Fig. 1). The advantage of this method is that the transverse joints open up uniformly and it avoids the possibility of individual joints opening up wider. A disadvantage is the fact that due to high bending stresses concrete pavements placed during the summer under strong solar radiation may sometimes already form longitudinal cracks during the first night. Therefore for example reflective white-pigment curing compounds have to be used in order to avoid high temperatures of the concrete surface zone.

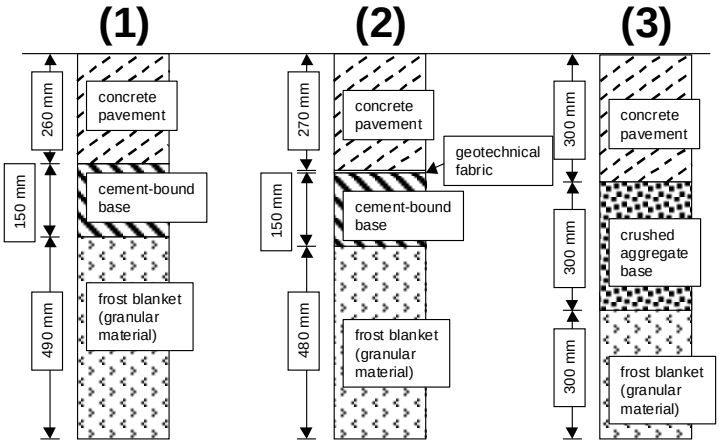

Fig. 2: Alternative designs of concrete pavements for German expressways for heaviest traffic loadings and a frost-proof pavement structure of 900 mm:
(1) concrete pavement on cement-bound base
(2) concrete pavement on geotechnical fabric and cement-bound base
(3) thick concrete pavement on crushed aggregate base

(2) Concrete pavement on geotechnical fabric and cement-bound base
Geotechnical fabrics are non-wovens of PE (polyethylene) or PP (polypropylene) with a weight of 500 g/m². This fabric is fixed to the cement-bound base prior to placement of the concrete. If concrete haulers have to drive over the geotechnical fabric, for instance, special care must be taken to avoid creases and cracks. As the geotechnical fabric prevents a bond from forming between the cement-bound base and the concrete, uncontrolled cracks in the base cannot lead to reflection cracks in the concrete. Therefore, no notches are required in the cement-bound base. The non-woven fabric prevents the cement-bound base surface from eroding. Water that might penetrate into the area between the base and the concrete pavement is drained to the edges of the pavement.

(3) Thick concrete pavement on crushed aggregate base (unbound roadbase)
The crushed aggregate base material is produced in a crushing plant and, if required, a downstream screening and mixing plant according to a specified granulometric composition (Fig. 3). It is then placed using graders or pavers and compacted using rollers and / or compactor plates. The

crushed aggregate base, having a minimum thickness of 300 mm, is so highly water-permeable that any water penetrating through joints or from the sides of the concrete pavement will not cause pumping [2]. Because concrete delivery trucks can compress the surface of the crushed aggregate base, a small roller must always be available when the concrete is placed so that the crushed aggregate base can be re-rolled if required.

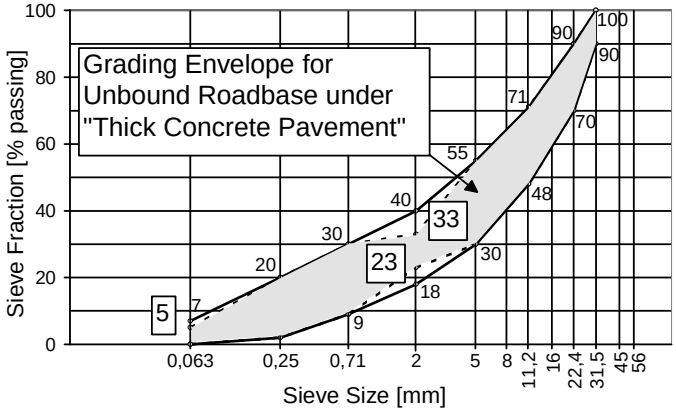

Fig. 3: Grain size grading area for a crushed aggregate base (unbound roadbase) in installed condition, on which a thick concrete pavement is directly constructed

CONCRETE TECHNOLOGY

Portland cement grade CEM I 32.5 (equivalent to ASTM PI), which also has to satisfy additional requirements, is used for concrete pavements [3]. The cement may not be too finely ground and must not set for at least two hours. In the 1980s, longitudinal, parallel or reticular cracks formed on the surface of several five- to ten-year-old concrete pavements, which gradually led to their destruction [3]. A cement having an Na_2O equivalent of 1.0 to 1.4 percent had been used in all damaged concrete pavements. The suspicion that this was due to an alkali-aggregate reaction could not be confirmed. The aggregates came from highly varied deposits. In actual fact, however, laboratory tests showed that cements with a high alkali content lead to stronger hygric deformations and, thus, to higher restrained and internal stresses in the concrete [4]. Ever since only cements having Na_2O equivalents of less than 1.0 % have been used for road construction, no such cracks have occurred.

Higher requirements than those for structural concrete also apply to the aggregates. For the top concrete layer, at least 50 percent of the aggregates having a particle size of more than 8 mm and at least 35 percent of all aggregates must be crushed. In addition, high freezing resistance and high resistance to polishing (polished stone value greater than 50) are required.

The concrete must have a minimum content of entrained air voids of 4.0 percent. The spacing factor of the entrained air voids must not exceed 0.20 mm. Damage to the concrete was only found if the concrete had been exposed to frost and treated with de-icing salt at an early stage, or if the concrete surface had been reworked during setting.

The concrete must have a minimum cement content of 350 kg/m³. The water-cement ratio ranges between approximately 0.38 and 0.44. Compressive strength is tested on 200 mm cubes at an age

of 28 days and on drilled cores having a diameter of 150 mm and a height of 150 mm at an age of 60 days. On average, it must be at least 40 N/mm². The bending tensile strength is only tested in a qualification test prior to execution of the work; it must have a minimum value of 5.5 N/mm² after 28 days.

CONCRETE PRODUCTION, CONCRETE PLACEMENT

Concrete Production

All expressway resurfacing work has to be carried out within the shortest possible time in order to minimize traffic impediments. The vast majority of construction projects of this type are therefore subject to strict deadlines; if these are exceeded, severe penalties are imposed on the contractors. For example, up to 3,000 m³ of concrete have to be placed per day in order to be able to meet the specified short construction periods and to efficiently employ the concreting equipment. Local ready-mix concrete plants do not have sufficient capacity to supply these high volumes of concrete, especially over an extended period of time. For this reason, special mixing plants are usually set up directly at the expressway construction site for major projects (for example overall concrete requirement more than 5,000 m³ and placement width of more than 10 m) to reliably produce the required volumes of high-quality road concrete [5]. These mixing plants can be quickly and easily set up, dismantled and transported – a newly developed plant even fits completely in seaworthy ISO containers (Fig. 4).



Fig. 4: Newly developed concrete batch mixer which fits completely in seaworthy ISO containers, capacity 240 m³ per hour

Either batch mixers (Fig. 4) with a capacity of approximately 100 m³/h to 300 m³/h, or continuous mixers with a capacity of up to 300 m³ per hour are used, which have proven successful for producing large volumes of high-quality road concrete over the past 15 years. The base materials are fed in a continuous flow through special weigh feeders into the mixer where they are mixed and conveyed to the discharge.

Concrete Placement With Slipform Pavers

Today, cost-effective construction of concrete traffic areas that have to satisfy extremely high requirements, such as high strengths, high resistance to freezing and de-icing salts, as well as perfect levelness, is only possible with the slipform construction method [5]. Like the mixing

plants, state-of-the-art slipform pavers can be quickly and easily set up, dismantled and transported on conventional flat-bed trucks, or even in seaworthy ISO containers, without the need for much alteration work (Fig. 5).



Fig. 5: Newly developed Slipform paver which can be transported completely in seaworthy ISO containers without the need for much alteration work – ready for driving in an ISO container

It is not unusual for state-of-the-art slipform pavers to have placement rates of 800 m per day and more. Placement widths of up to 16.75 m, and of up to 18 m for special surfacings (Fig. 6) are currently feasible. Greater thicknesses than those normally required for expressways, for example 450 mm for runways, can also be placed using slipform technology.



Fig. 6: With special slipform pavers placement width up to 18 m are possible

The following procedure is used for placing concrete in slipforms for unreinforced surfaces: The mixed concrete is hauled to the point of placement by dump trucks and deposited in front of the paver. Aluminum tipping skips may not be used to haul the concrete in order to prevent damage to the concrete pavement caused by the formation of hydrogen from abraded aluminum particles. In the case of full-course placement – i.e. the concrete pavement consists of just one grade of

concrete and the entire thickness is placed in one single operation –, the concrete is placed by a slipform paver at the specified thickness and elevation. It is then compacted using internal vibrators, with the dowels and tie bars being placed on baskets. Otherwise, they are vibrated into the compacted concrete. In this case, however, particular care must be exercised during vibrating and subsequent smoothing to reliably preclude any structural transformation around the dowels and tie bars, which would affect the performance properties and durability of the concrete surface.

Under current regulations, heavy-traffic road pavements or aircraft movement areas of concrete should normally be placed in two layers or at least in two courses, mainly to ensure surface quality, durability, ride comfort and cost-effectiveness [5]. Two courses means that the concrete is placed in two operations, with the base and top courses consisting of the same grade of concrete. In the two-layer construction method, the bottom and top layers of concrete have different compositions, mainly resulting from the requirements that have to be satisfied by the surface of the top layer, which is directly exposed to traffic and weather. Cheaper gravel may be used for the bottom layer of concrete.

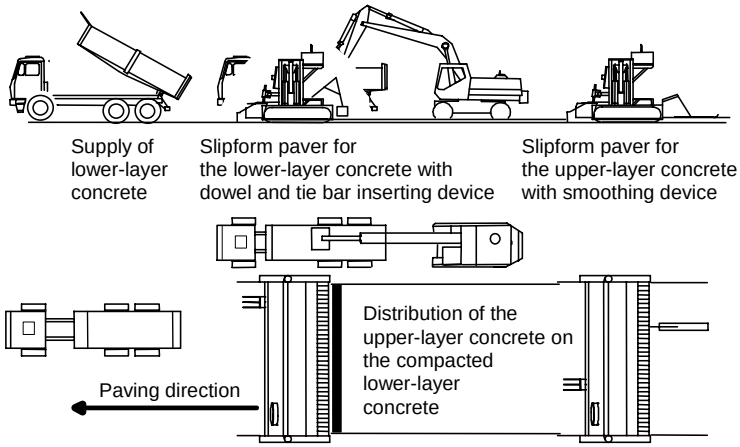

Fig. 7: Slipform paving train consisting of two slipform pavers for construction of concrete pavements in two layers or two coures; here the concrete for the top course / layer is placed in front of the second paver by an excavator from the side

If two separate slipform pavers are used for two-course or two-layer construction (Fig. 7,8), the first paver places the base course or bottom layer concrete at the specified thickness and elevation [5]. It is then compacted using internal vibrators. Subsequently, the dowels and tie bars are automatically vibrated into the compacted base concrete.



Fig. 8: Construction of a concrete pavement in two layers or two coures with two slipform pavers, the concrete for the top course / layer is placed in front of the second paver by a front-end feeder

The top course / layer is placed in front of the paver on the compacted base concrete. Depending on site conditions, this can be done by a front-end feeder over the base concrete paver, and / or by an excavator from the side (Fig. 7,8). The second slipform paver places the top course or layer on the base concrete at the specified thickness and elevation and smoothes the concrete surface crosswise and lengthwise. It is important for the base and top concrete to be placed wet-in-wet in order to achieve a permanent bond between the two layers. If only one slipform paver is used for two-course or two-layer placement, the same operations are performed by this single machine, which is correspondingly large and heavy. Height and directional control of the entire paving train is currently still mainly being effected electronically by means of guidewires. However, positive experience has already been gained with guidewireless controls.

Today sometimes reinforcement is still used, for example in special cases in front of bridges. Slipform construction is also the most cost-effective method for reinforced surfaces [5]. The reinforcement is placed on the base concrete. The top concrete is then fed in front of the top concrete paver from the side. Another option is to place the reinforcement directly in front of the paver by means of attachments and to deliver the concrete from the front (Fig. 9).



Fig. 9: Construction of a continuously reinforced concrete rigid track for a German high speed railroad with a slipform paver, delivering the concrete from the front of the paver

Slipforming equipment not only allows lanes having a constant width to be placed. It is also possible to reduce the construction width during construction (Fig. 10), to add further concrete lanes to existing pavements or to construct areas with changing width, for example for acceleration and deceleration lanes at exits and interchanges with slipform pavers, without the need for time-consuming and expensive provision of formwork [5].



Fig. 10: Changing construction width during construction of a concrete pavement in slipform technique, behind the slipform paver the working platform follows for dragging a burlap to texture the wet concrete surface and to spray the liquid curing compond on the surface

Using easy-to-maneuver equipment, it is also possible to use slipforms to construct concrete curves with a minimum radius of just 30 m (even smaller radii are possible with special formwork). In the case of small curve radii, simple formwork, for example of timber or steel, can also be installed which is then passed over by the slipform paver [5].

SURFACE TEXTURE

The surface of road pavements has to satisfy the following three – in part contradictory – requirements: (1) Durably good skidding resistance, as well as (2) evenness, and (3) noise-reducing properties. The last step, therefore, is for the concrete surface to be smoothed by the slipform paver, first crosswise using the finishing screed and then lengthwise using the longitudinal smoother ("Super-Smoother"). Normally, a self-propelled working platform follows behind the slipform paver (Fig. 10). This platform drags along a piece of burlap (weighing approximately 300 g/m²) to texture the wet concrete surface longitudinally in order to achieve a concrete pavement that offers durably good skidding resistance, while at the same time developing only little noise. Other options to achieve a low-noise texture include the use of other smoothing devices on the paver, additional texturing of the wet concrete surface, or placement of a thin top layer of concrete having a small maximum aggregate size of 8 mm [6]. If after more than 15 years under traffic the surface mortar has been removed the small aggregate appear at the surface which causes a surface with good skidding resistance and low noise, too. Also subsequently after paving the mortar can be brushed from the surface of the green concrete and the small aggregate are exposed on the surface of the pavement (so called "exposed concrete" or "Austrian Concrete Surface"[7]). Tests carried out to further optimize texture showed that a surface with good skidding resistance and low noise development can be produced by dragging along artificial turf (weighing approximately 2,000 g/m²) [6].

CURING

Cement will only hydrate if the concrete does not dry out; for this reason, a liquid curing compound is finally sprayed onto the concrete surface from the platform (Fig. 10). Later on, water is additionally sprayed onto the surface for curing, especially at high temperatures and / or high wind velocities. Up until the 1980s, tents were dragged along behind the paver to protect the concrete against rain or strong solar radiation. However, tents have major drawbacks, including unavoidable drip spots on the concrete surface due to condensation. In addition, there is a risk that squalls could blow the tents into vehicles passing the construction site while the resurfacing work is being carried out, which is quite often the case today, and they strongly impede site operations. Tents are therefore no longer used if the concreting work is suspended sufficiently in advance of rainfall.

In numerous cases, more than 7.50 m wide concrete pavements produced on hot summer days between late May and early September displayed longitudinal cracks after the first night – mainly in sections that had been placed during the morning. Tests showed that the concrete heats up strongly to a depth of approximately 10 cm at the top, not only due to the heat of hydration but also because of solar radiation [8]. At the same time, the heat of hydration at the bottom

passes into the base course when the base course underneath is still cold. The concrete at the top therefore hardens at a much higher temperature than at the bottom (high zero-stress-temperature-gradient). High bending stresses occur when the concrete at the top cools down during the first night, while there is hardly any change in its temperature at the bottom. These stresses result in flexural cracks that are wide open on top but frequently only extend to the center of the pavement. In many cases, the risk of cracking can be greatly reduced by cutting all longitudinal and transverse joints at an early stage. In addition, the development of high temperatures on the concrete surface due to solar radiation has to be prevented. Experience has shown that spraying the surface with water, i.e. activating latent heat, is useful for this purpose. Reflective white-pigment curing compounds that have recently been developed can also reduce heat-up of the concrete surface considerably.

JOINTS

The approximately 3 mm wide joints are cut at the earliest possible stage, with the depth of the cuts for transverse joints amounting to approximately 25 to 30 percent of the pavement thickness and 40 to 45 percent for longitudinal joints. Joint cutters with water-cooled diamond saw blades are used for this work. Today, joint cutters are available that extract the mud produced during the cutting process directly at the saw blade (Fig. 11). Prior to filling the joint, the groove is expanded to a width of 6 to 15 mm and a depth of 15 to 35 mm and usually filled with a bituminous joint sealing compound or a neoprene profile. To avoid problems at joint intersections, neoprene profiles are frequently used for transverse joints and asphalt-based compounds for longitudinal joints. Special devices have been developed for inserting the neoprene profiles.



Fig. 11: Modern joint cutter which extracts the mud directly at the saw blade

The doweled end-of-day joints quite often cause problems because the concreting work has to be continued next morning while the concrete strength is still low. Unevenness frequently forms there. To avoid such end-of-day joints, work is often carried out around the clock in day and night shifts at large construction sites, weather permitting.

REGULATIONS AND SUPERVISION

In Germany, the following major regulations apply to concrete road pavements, in addition to DIN and European standards for general concrete construction:

- Dimensions of road pavements: RStO 2001 [9]
- Construction of concrete pavements: ZTV Beton-StB 2001[10]
- Execution of joint work: ZTV Fug-StB 2001 [11]
- Maintenance and repair of concrete pavements: ZTV BEB-StB 2001 [12].

Contractors must provide a four-year warranty. Regulations are currently being prepared which define the properties that concrete pavements must still display after four years to allow specific functional requirements to be stipulated in construction contracts. If defects nevertheless occur in spite of all these strict regulations and tests, the reason usually is that inexperienced contractors with untrained staff and unsuitable equipment bid concrete road pavements at very low prices and are therefore awarded the contract.

The following five types of tests are important for concrete road construction:

(1) Under their own internal supervision, the manufacturers test cement, aggregate and additives.

(2) In addition, an independent testing agency reviews the plants' internal supervision once or twice a year; this is called external supervision.

(3) The concrete pavement contractor specifies the concrete composition prior to commencement of the paving work and uses a qualification test to demonstrate that the concrete can achieve the specified properties.

(4) During construction of the concrete pavement, the contractor performs an internal supervision test to establish whether the required properties are achieved, above all compressive strength, content of entrained air, thickness and evenness of the pavement and, most recently, skidding resistance as well.

(5) In control tests carried out on the finished pavement, a drilling core is taken every 1000 m^2 to determine the compressive strength and thickness of the pavement. In addition, evenness and skidding resistance are also tested.

RECYCLING

To resurface expressways, the existing concrete pavement – which is usually 30 to 40 years old – is removed, crushed in crushing plants and graded according to particle size in screening plants. Sand having a particle size of up to 2 or 4 mm is used for cement-bound bases or other purposes. Size 2/4 or 4/8, 8/16 and 16/32 mm crushed concrete is used for aggregate of the base concrete, together with natural sand. Small amounts of joint sealing compound or asphalt do not have a negative effect on the quality of the concrete [13-16]. Attempts to also use crushed concrete for top concrete have proven successful [17]. When old concrete pavements are resurfaced, their thickness and width are normally increased. Since the amount of crushed concrete obtained from the old concrete pavement is insufficient, new aggregates have to be used as well, most effectively in the top concrete.

The timetables for planning, tendering and execution of resurfacing work for a pavement section are kept very tight in order to avoid excessive impediments to traffic due to narrower lanes, speed limits and detours. Because of the limited time available, it is therefore not possible to perform lengthy freezing tests. But this is acceptable because the behavior of the old concrete has shown in actual practice over a service life of decades whether it has sufficient freezing resistance to frost and de-icing salt. But the structure of the crushed concrete can also be damaged by an incorrect crushing process, e.g. in a jaw-type crusher, by incipient cracks [13,16]. It has therefore been specified that the last crushing operation must always be performed in an impact crusher.

Old concrete pavements that have defects in the structure of the concrete, e.g. due to alkali-silica reactions or damage caused by freezing or de-icing agents, are crushed in the same manner. However, crushed concrete of this type is not used for new concrete, but only for crushed aggregate bases [2,6]. The crushing process can be optimized in such a manner as to achieve the required particle size distribution curve for a crushed aggregate base (Fig. 3), without the need for screening and subsequent mixing of the crushed concrete.

FAST TRACK PAVING

High-early strength concrete is employed to repair individual slabs within one day and open it for traffic at the evening of the same day. A cement content of 360 to 400 kg/m³ is required to achieve the strength needed for re-opening the road to traffic after about 6 hours (compressive strength of 12 N/mm²). The use of superplasticizers affords satisfactory workability at a low water-cement ratio. Cement, superplasticizer and air entraining agent have to be matched to one another to ensure a sufficient amount of small air voids. The concrete is hauled to the point of placement in truck mixers, compacted with internal vibrators, and the surface is then smoothed with finishing screeds. The joints are cut before the section is re-opened to traffic.

LONG TERM BEHAVIOR

It is extremely difficult and time-consuming to calculate an expressway pavement's service life, taking into account traffic load, pavement thickness, concrete quality, etc., and to correlate the results with the behavior of a concrete pavement in service. But a greater pavement thickness (the pavement was formerly only 220 mm thick, even for very high traffic loads; since 1986, concrete pavements for extremely high traffic loads have been 260 to 300 mm thick) undoubtedly has the same favorable effect as improved base courses and small slab dimensions. A service life of at least 25 to 40 years for modern concrete pavements should be realistic.

CONCLUDING REMARKS

The present high standard of concrete pavement design and construction in Germany is the result of high efforts in research and development over many years. There are a great number of improvements, which resulted from a close cooperation between state authorities, maintenance en-

gineers, contractors and research experts. Many research projects have been concluded in the past years or are still going on, for instance:

- Thermal gradients in concrete pavements
- Durability of concrete surface properties
- Influence of sand properties on skidding resistance
- Methods to avoid cracks caused by thermal gradients
- Long-term behavior of pavements with recycled concrete aggregates
- Influence of cement properties on surface cracks
- Test methods for curing compounds with reflecting properties
- Bending strength of high strength concrete
- Influence of the concrete surface on noise reducing properties
- Avoidance of longitudinal cracks in concrete pavements.

There is no doubt that the results of the high efforts in research and development will contribute to an improvement of the long term behavior of the concrete pavements and to reduce maintenance costs. However it must not be overlooked that a very strong impetus to make concrete pavements better, results from the high level cooperation with concrete pavement experts from all over the world.

REFERENCES

[1] Fleischer, W.; Sodeikat, Ch.; Springenschmid, R.: Conclusions from the long-time behavior of cement-bound road bases. 7th International Symposium on Concrete Roads, 3. – 5. October 1994 Vienna. Proceedings, Session 1, Design and Performance, pp. 55-60, AIPCR – PIARC 1994

[2] Blessmann, W.; Fleischer, W.; Wippermann, D.: Concrete pavement on a crushed aggregate unbound roadbase, a new design for heavy-traffic motorways. 8th International Symposium on Concrete Roads, 13. – 16. September 1998 Lisbon. Proceedings, Theme I, Quality Assurance and Specifications, pp. 35-44, AIPCR – PIARC 1998

[3] Springenschmid, R.; Fleischer, W.: Influence of cement on the durability of concrete pavements. 7th International Symposium on Concrete Roads, 3. – 5. October 1994 Vienna. Proceedings, Session 6, Materials and Concrete Technology, pp. 89-95, AIPCR – PIARC 1994

[4] Fleischer, W.: Influence of the cement on shrinkage and swelling of concrete. Doctoral thesis, Technical University of Munich, 1992. Schriftenreihe: Reports of the Institute of Building Materials, Technical University of Munich, editor R. Springenschmid, 1991, H. 1

[5] von Wilcken, A.; Fleischer, W.: The use of slipform technique for traffic infrastructure construction. 8th International Symposium on Concrete Roads, 13. – 16. September 1998 Lisbon. Proceedings, Theme II, Progress in Concrete Road Materials and in Construction Pro??cesses, pp. 89-97, AIPCR – PIARC 1998

[6] Fleischer, W.; Grossmann, D.; Möschwitzer, H.: Neuerungen bei Fahrbahndecken aus Beton, Teil 1: Grundlagen und Vorschriften, Teil 2: Baumaßnahme A 4. Beton 50 (2000) H. 7, pp. 376-380, H. 8, pp. 442-447

[7] Sommer, H.: Developements for the exposed aggregate technique in Austria. 7th International Symposium on Concrete Roads, 3. – 5. October 1994 Vienna. Proceedings, Session 8, Noise Reducing Surfaces, pp. 133-140, AIPCR – PIARC 1994

[8] Springenschmid, R.; Hiller, E.: Influence of temperature during curing on stresses in concrete pavements. 8th International Symposium on Concrete Roads, 13. – 16. September 1998 Lisbon. Proceedings, Theme II, Progress in Concrete Road Materials and in Construction Processes, pp. 259-263, AIPCR – PIARC 1998

[9] Richtlinien für die Standardisierung des Oberbaus von Verkehrsflächen, Ausgabe 2001, RStO 2001. Forschungsgesellschaft für Straßen- und Verkehrswesen. FGSV Verlag, Köln 2001

[10] Zusätzliche Technische Vertragsbedingungen und Richtlinien für den Bau von Fahrbahndec??ken aus Beton, Ausgabe 2001, ZTV Beton-StB 2001. Bundesministerium für Verkehr, Bau- und Wohnungswesen, Abteilung Straßenbau. FGSV Verlag, Köln 2001

[11] Zusätzliche Technische Vertragsbedingungen und Richtlinien für Fugenfüllungen in Verkehrsflächen, Ausgabe 2001, ZTV Fug-StB 2001. Bundesministerium für Verkehr, Bau- und Wohnungswesen, Abteilung Straßenbau. FGSV Verlag, Köln 2001

[12] Zusätzliche Technische Vertragsbedingungen und Richtlinien für die Bauliche Erhaltung von Verkehrsflächen - Betonbauweisen, Ausgabe 2001, ZTV BEB-StB 2001. Bundesministerium für Verkehr, Bau- und Wohnungswesen, Abteilung Straßenbau. FGSV Verlag, Köln 2001

[13] Springenschmid, R.; Fleischer, W.: Zur Technologie der Wiederverwendung von altem Straßenbeton. Straße + Autobahn 44 (1993) H. 12, pp. 715-718

[14] Franke, H.-J.: Recycling concrete pavements in motorway construction. 7th International Symposium on Concrete Roads, 3. – 5. October 1994 Vienna. Proceedings, Session 3, Reconstruction: Recycling, Stabilization, pp. 129-134, AIPCR – PIARC 1994

[15] Sommer, H.: Recycling of concrete for the reconstruction of the concrete pavement of the motorway Vienna - Salzburg. 7th International Symposium on Concrete Roads, 3. – 5. October 1994 Vienna. Proceedings, Session 3, Reconstruction: Recycling, Stabilization, pp. 173-177, AIPCR – PIARC 1994

[16] Springenschmid, R.: Möglichkeiten und Grenzen für die Wiederverwendung von Beton aus Fahrbahndecken. Betonstraßentagung 1995. Forschungsgesellschaft für Straßen- und Verkehrswesen, Schriftenreihe der Arbeitsgruppe Betonstraßen, H. 22. Kirschbaum Verlag, Bonn 1996, pp. 35-40

[17] Springenschmid, R.; Sodeikat, Ch.: High-quality concrete with recycled aggregates. 8th International Symposium on Concrete Roads, 13. – 16. September 1998 Lisbon. Proceedings, Theme V, Safety and Environment, pp. 191-194, AIPCR – PIARC 1998