CRCP: A LONG-LASTING PAVEMENT SOLUTION FOR TODAYS MOTORWAYS, THE DUTCH PRACTICE

Marc J.A. Stet, B.Sc. Civ. Eng.
Senior consultant
KOAC-WMD
(Dutch Road Research Laboratories)
Schumanpark 43
NL 7336 AS APELDOORN
The Netherlands
Phone: +31 555 433 100
Fax: +31 555 433 111
E-mail: stet@koac-wmd.nl

and

Adrian J. van Leest, M.Sc. Civ. Eng.
Project manager
CROW
(Information and Technology Centre for
Transport and Infrastructure)
P.O. Box 37
NL 6710 BA EDE
The Netherlands
Phone: +31 318 695 304
Fax: +31 318 621 112
E-mail: vanleest@crow.nl

On behalf of the CROW working committee on CRC pavements

ABSTRACT

Continuously reinforced concrete pavement (CRCP) structures are becoming more popular for high quality transport purposes and long lasting pavement solutions in The Netherlands. This increase raised the demand for practical guidelines, recommendations and standardisation with respect to design, construction details, the preparation of tender documents and construction. Up to now CRC pavements were more or less treated as unique projects each time.
The total report of the research project describes various topics with respect to CRCP design. Technical details for the determination of reinforcement, longitudinal and transverse steel, wearing courses, interlayers and foundation layers as well as sub-bases have been investigated. Also examples of standard drawings for pavement cross sections, reinforcement patterns, pavement ends and joints have been developed in the project and will become available on CD. Last but not least attention has been paid to the construction and quality assurance / quality control during the construction of CRCP pavements. The report addresses the current practice of primary CRCP motorways in the Netherlands.

INTRODUCTION

Over the last 10 years, the Dutch Ministry of Transport (MOT) have constructed a number of road sections in 'continuously reinforced concrete pavement' (CRCP) and over the course of this period, different variations of this type of road pavement have been applied. This continued development has produced a clear improvement in the performance of cement concrete pavement constructions. When considered according to technical concerns, as well as from the commercial point of view, it appears that these pavements prove to be quite an attractive proposition indeed. There are basically two types of rigid pavements applied on "motorways" or "interstate highways", i.e. non-reinforced and continuously reinforced concrete. Transverse joints in jointed concrete pavements require maintenance. The absence of transverse joints makes CRCP an attractive proposition for use on motorways, especially since application of a porous asphalt wearing course (a.k.a. Porous Friction Course or PFC) is mandatory for major roads in the Netherlands. Placed over jointed concrete pavement, the joints will reflect through the wearing course in due time. Further advantages to using continuously reinforced concrete pavements are:

1. Due to the high degree of continuity of CRCP (exhibiting only minor crack width with good load transfer), specific edge conditions of jointed concrete slabs will not occur on CRCP;
2. Thanks to the greater durability, simplicity and efficiency of CRCP construction, it eases construction. Therefore construction costs can be kept within reasonable and competitive limits;
3. Experience show that due to the absence of joints this pavement type requires little maintenance. Traffic disruption is kept to an absolute minimum;
4. The 'built-in flexibility', together with the homogeneous load distribution throughout a concrete section, it is able to overcome moderate uneven settlement;
5. The finely branched crack pattern makes it possible to construct a course of open-graded asphaltic concrete (PFC), resulting in a low-noise emission and a good visibility with no splash and spray effects. This type of pavement structure not only ensures driving comfort but it is also a very promising concept as a low-maintenance pavement for motorways, where only the wearing course may need replacing from time to time;
6. If the surface of the wearing course is constructed with a discontinuous concrete mixture (as part of the total concrete slab's thickness) that has optimum exposed surface aggregates, then it is possible to produce a low-noise road surface which is both durable and requires little maintenance.

CRCP PAVEMENT STRUCTURE

The function of a pavement structure is to bear traffic loads and transfer them to the natural ground in such a way that the road allows safe and comfortable use. The soil properties of the underlying sub-grade or natural ground affect the durability of a road pavement and are influencing the choice of pavement structure and have a profound affect on the pavement performance. Homogeneous load-bearing capacity, adequate resistance to erosion of materials used and limited susceptibility to settlement are the most important parameters to consider. In figure 1 the definitions used for the components of a cement concrete pavement structure are indicated.

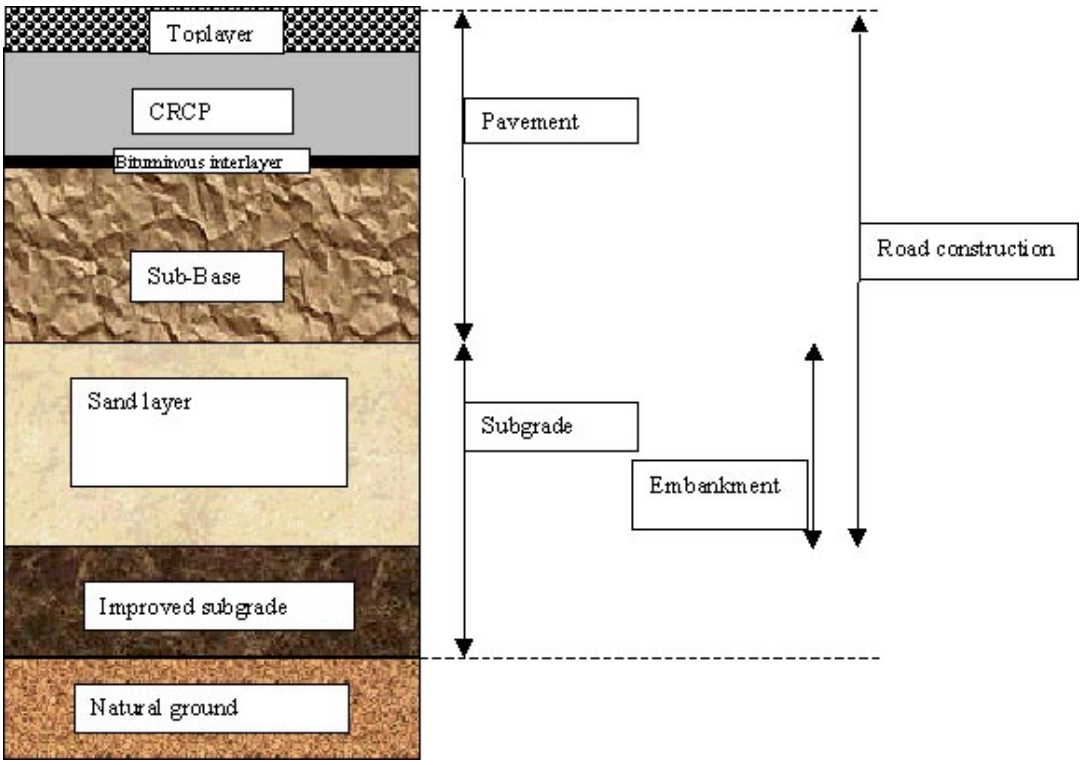

Figure 1 Structure of a continuously reinforced concrete pavement.

Sub-base

With cement concrete pavements a sub-base is primarily applied to ensure a good and even foundation for the road pavement. The bottom of the sub-base should be located at least 0.80 m above the highest recorded level of the groundwater table. When a cement-bound sub-base is applied, bond to the CRCP can result in premature cracking. This has led to the application of unstabilised courses as foundation courses for concrete pavements. Plate-bearing tests undertaken to ascertain the load bearing capacities of concrete slabs have shown that an unstabilised road foundation course of 0.25 m mixed recycled aggregate with a particle size of 0 to 40 mm together with a bituminous base course of 0.06 m has a load-bearing capacity (modulus of subgrade reaction) which is at least comparable to that obtained with a sub-base of lean-mix concrete.

Bituminous interlayer

An asphaltic layer prevents so-called crack reflections in the concrete by counteracting erosion and acts as a smooth worktop, a road for works traffic and ensures a good friction characteristic bearing in mind the crack pattern in the concrete pavement.

Cement concrete

Environmental classification

The durability of a concrete structure generally depends on the aggressiveness of the environmental conditions and the resistance which the concrete will offer with regard to the aggressive action of the prevailing conditions. The density of the outer skin has a particularly important role to play as far as durability is concerned. The permeability of the cement stone has a direct correlation with porosity and so also with the water-cement ratio. By applying an air-entraining agent in combination with a water-cement factor ≤ 0.55 any entrained water which freezes will be able to expand in the pores created. In this way the concrete is protected from damage caused by the action of freezing and thawing and from possible hazards experienced through the salting of roads in winter. Although not stipulated as a requirement, the application of Portland fly-ash cement (CEM II/ B-V 32,5R) or Portland cement is preferred.

Strength classification

Concrete is divided into categories according to its compressive strength. This classification also indicates the tensile strength of concrete which dominates the performance in practice. Compressive strength of 45 MPa at 28 days is preferred as a rule. The strength of concrete is monitored by means of test cubes, or cylinder cores extracted from the concrete.

Consistency

The degree to which newly laid concrete can be worked with is set out in the consistency range indicated. The slip-form paver requires moist fresh concrete in consistency range 1 with a degree of compaction of 1.20 to 1.30 due to the standards of the “green strength”. In addition the consistency should be very constant throughout the concrete with regard to evenness of surface and thickness of course.

Wearing course

An asphaltic wearing course has other advantages apart from the noise reducing effect, for example very little surface water collects in puddles which may splash passers by and the road marking remains easily visible at night and even after heavy rainfall. Of course, the road surface has to comply with the standard requirements of friction levels, evenness and drainage [1].

In order to help reduce noise emission ‘Prescribed standards for the Calculation and Measurement of Traffic noise’ (RMV in Dutch) are applied in The Netherlands. Applying measures at the source has become an effective noise abatement measure for quieter types of road surfacings. In this framework, all surface types are made comparable based on a road surface correction term. If the noise emission is too loud, corrective measures must be taken. The road surface correction is determined in relation to a reference road surface type of dense asphaltic concrete whose sound engineering properties have been set out in CROW Publication 133 [2]. The road surface correction terms of an asphaltic porous wearing course at speeds between 85 and 110 km/h is minus 4 dB(A). For a discontinuous graded fine concrete mixture with optimum exposed surface aggregates, this correction term is minus 2 dB(A).

CRCP PAVEMENT DESIGN

Function of reinforcement

Reinforcement is applied to absorb thermal shrinkage. The function of the steel is to regulate the cracking (crack spacing and crack widths) whereby the continuity of the slab is maintained. During hydrometric shrinkage, the concrete contracts which leads to movement. As the steel reinforcement does not contract with the crack, movement is inhibited and stresses will increase. This results in a regular pattern of controlled transverse hairline cracks. The reinforcement is more intended to act as a crack distributor than to absorb tensile stresses resulting from bending caused by truckloads. Due to the nature of the deformation, this reinforcement is positioned at 35-50% of the distance of the slab thickness applied from the top of the concrete, so that there is sufficient coverage of the bars by the concrete on both the top and bottom.

Only limited transverse reinforcement is applied which is mainly intended to keep the longitudinal reinforcement at a certain level and to act as support for such during construction. The transverse reinforcement is therefore equipped with truss-shaped interval spacers. This helps prevent the occurrence of systematic roughness, at the points of intersection of the longitudinal and transverse reinforcement, mainly caused as a side effect of compaction and internal vibration. The transverse reinforcement does not have to act in any crack distribution capacity as the presence of longitudinal joints in the pavement does not present any problem. The transverse reinforcement is laid at an angle of 60° to the longitudinal axis in order to ensure that this transverse reinforcement does not induce any transverse cracking. In addition when continued into the adjacent lane, the transverse reinforcement acts as a tie-bar in the longitudinal joints.

Adequate reinforcement percentage prevents overloading of the steel bars in an initial crack by cracking in the surrounding concrete, long before the elasticity limit of the steel is reached. Continuously reinforced concrete pavements can be depicted as a series of beams placed one after the other on an elastic sub-base or bedding. The width of these beams is equal to the crack spacing and the length is equal to the space between the longitudinal joints. The beams are linked together by the hinging of the longitudinal reinforcement. If the crack spacing becomes too small, the longitudinal rigidity of the concrete pavement will be diminished. This phenomenon occurs if there is too high a reinforcement percentage or if the reinforcement is distributed too closely. A consequence of this is that transverse concrete stress is increased. If there is continuous loading on certain traffic lanes then fatigue of the almost non-reinforced concrete in that direction may result in the formation of longitudinal cracks. When these longitudinal cracks combine with the existing transverse cracks then mini-slabs appear to be produced which may subsequently become unstable when bearing traffic loads (see figure 2). Theses blocks may start to break-up and be subject to spalling, after which there is a good chance that these mini-slabs will become loose and detach from the rest of the concrete and subsequently being popping out as traffic wears them down. This is referred to as ‘punch-outs’.

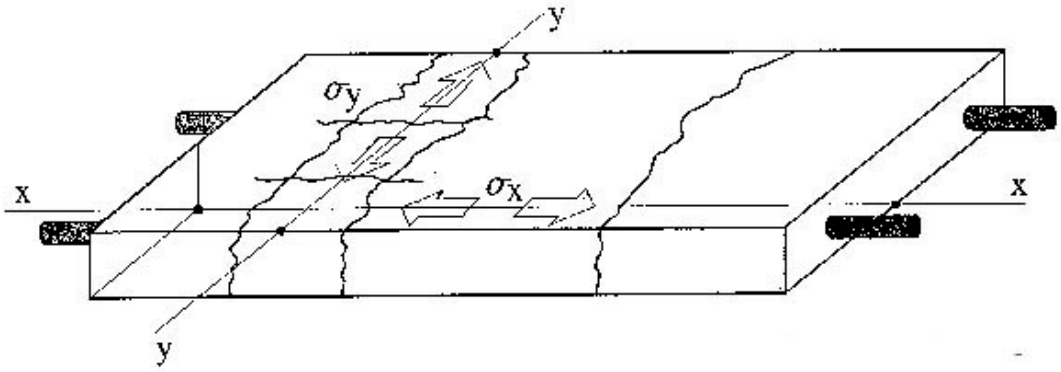

Figure 2 Damage caused by too little crack spacing: the occurrence of "punch-outs" [3].

The four main causes of the occurrence of this type of damage are: water seeping into the interface separating the concrete slab and the sub-base; a sub-base which is susceptible to erosion; heavy and busy traffic loads at the edges of concrete course; cracks lying close together. The eventual effect of cracking in CRCP is determined by a number of behavioural parameters. Design methods make little or no allowance for the inevitable variation and/or interaction of a series of parameters which have an effect on the eventual behaviour of cracks. A brief analysis of a few important parameters included in table 1 helps illustrate this point.

Table 1 The effect of various parameters on the crack pattern [4].

Parameter	**Effect on crack formation**
Concrete tensile strength	1. depends on the intrinsic concrete strength classification and lying between broad limits (at least 10% variation); 2. average value of 2.7 MPa; 3. heterogeneous (low) values may accentuate 'cluster formation' of cracks.
Influence of ambient temperature during construction	1. when construction work is carried out during the summer months there may be a relatively large range of temperature between night and day, which in turn will lead to a small average crack spacing; crack formation will quickly stabilize (after about one year); 2. when construction work is carried out in the winter a large average crack spacing will result which takes longer to stabilize (a few years).

Friction with the underlying course	1. a higher friction implies less steel stress and consequently greater crack widths.
Limit of elasticity or Yielding point of steel	1. a higher limit of elasticity or yielding point (for example 600 MPa) produces extra safety with regard to the overloading of steel particularly where there is localised concrete over-thickness (overlay).
Bond characteristics of steel	1. this is directly linked to the adhesion and shape of the ribbed bars; 2. a good bond limits the crack width; 3. when the bond is lower this results in the formation of wider cracks spaced more widely apart

Determining the concrete slab's thickness

Considering a series of beams on an elastic bedding, it is possible to derive the required slab thickness from the stresses occurring as a result of traffic and temperature at the point of the cracking. The Highway Agency concerned does not however use the strength calculation for the loading on transverse cracks when setting out the required slab thickness [6] with non-reinforced concrete pavements, but is more concerned with the thickness of this type of pavement applied in Belgium. The currently applied minimum thickness for use on motorways is 250 mm.

Determination of reinforcement percentage

A compromise is found in the design between a limited crack width (0.2 mm) to avoid corrosion of the reinforcement and to attain the greatest possible crack spacing to account for a good load bearing capacity. Considering the high degree of unpredictable factors which affect the percentage of reinforcement applied, it is not common practice to apply complicated formulae and mathematical nomographs in order to determine the percentage of reinforcement. A crack pattern is obtained which generally meets requirements when the reinforcement percentages are between 0.6 and 0.7 % of the concrete taken in cross-section and there are intervals of between 0.12 and 0.20 m between reinforcement rods, where the concrete's used have varying levels of quality applying under various different climatic conditions.

Determining the reinforcement percentage on the basis of steel stress

When a transverse crack appears, the tensile strength which prior to the cracking is absorbed by concrete and steel will subsequently have to be absorbed by the steel alone. To design for this situation the performance characteristics of a centric bar loaded for tensile stress absorption will have to be researched. Due to the inhibited longitudinal deformation on the surface of the concrete slab tensile stresses are created which the reinforcement will have to absorb. In order to prevent the reinforcement bars from moving or even fracturing when (transverse) cracking occurs in concrete, a minimum amount of longitudinal reinforcement is needed depending on the strength classification of the concrete concerned. Using the –simple model- given here after a calculation may be applied that approximately 0.7% reinforcement is needed to keep the steel

stress in the centric rack below the allowable 0.2% elastic limit (yield point). This reinforcement percentage can be calculated as follows:

$$\omega = \frac{f_{bm}}{f_{srep} - \varepsilon_b E_a}$$

Where:
ω = the reinforcement percentage (%); f_{bm} = average concrete tensile strength (MPa); f_{srep} = representative value of the tensile strength of steel (MPa); εb = concrete strain at rupture (m/m); E_a = the elasticity modulus of steel (MPa).

The values for the commonly applied concrete classification B45 and the steel quality FeB500HWL are given below:

Concrete B45:	f_{bm} = 3.3 MPa	Steel FeB500HWL:	$E_a = 2 * 10^5$ MPa
	$\varepsilon b = 0.12 * 10^{-3}$		f_{srep} = 500 MPa

A minimum percentage of 0.69% for longitudinal reinforcement, is the minimum requirement to keep the steel stress below the 0.2% yield point. In situations where a bituminous interlayer is applied concrete classification of category B35 (f_{bm} = 2.8 MPa and $\varepsilon b = 0.12 * 10^{-3}$) is allowed, resulting in a reinforcement percentage of 0.59.

Percentage of reinforcement
Partly as a result of the experience of the adjustments in pavement structures applied in Belgium, the Dutch Highways Agency (MOT equivalent) increased the reinforcement percentage from 0.67 to 0.70 % as of December 1998 which also coincides with the values obtained from the simplified steel calculation. The minimum reinforcement percentage in strength classification B35, B45 and B55 successively amounts to 0.59, 0.70 and 0.75 %.

The pavements end
Continuously reinforced concrete pavements expand and contract due to the influence of temperature. Expansion is particularly noticeable at the ends of pavement. In order to restrict these changes in length and to prevent the pavement from transferring loads to the abutments of bridges and shoving adjacent asphalt pavements, a CRCP is fixed at both ends by ground anchors. These comprise of one or more anchoring beams across the road. By applying anchors the movement of the extremities of concrete slabs are retarded. As an anchor can not prevent all movement, a certain number of expansion joints should be applied. The number of these expansion joints depends on the remaining movement and the characteristics of the sealants and fillers used. The theoretical movement at the edges of pavement slabs of CRCP at a number of anchor beams of 1,2,3,4 or 5 amount to 41, 36, 33, 29, 25 mm respectively.

Dutch design practice for major roads

Dutch design practice for modern CRCP structures on major trunk roads has resulted in the development of the following standard construction (top-down):

- A noise reducing PFC course of approx. 50 mm thickness; double tack coat of 2 times 0.3 kg/m^2 bitumen emulsion;
- A slab thickness of 250 mm, concrete classification B45; environmental category 3; consistency range 1;
- Cement type: CEM II/B-V 32.5R (Portland fly-ash cement); minimum cement content 320 kg/m^3; only to apply curing compound (0.2 kg/m^2) if no asphaltic wearing course is applied; otherwise cover with foil;
- A sub-base of unstabilised mixed recycling aggregate with a 60 mm thick asphalt course .
- A longitudinal reinforcement percentage of 0.70%; steel type FeB 500 HWL, reinforcement rods of about 16 mm in diameter, bars centre to centre 120 mm. The length of bar is preferably at 14 m.
- Transverse reinforcement bars are positioned 700 mm centre to centre with a diameter of 12 mm (approximately 0.05 – 0.10% of the transverse cross-section; steel type FeB 500 HWL). These bars also absorb tensile stress which are ignored in shortening (shrinkage, temperature) in the longitudinal axis. In order to avoid transverse reinforcement bars coinciding with the position of transverse cracks it is positioned at 60° to the longitudinal axis.
- At the CRCP end anchors with four beams of 7.00 m centre to centre with a sunken depth of 1.50 m from the top of the pavement are applied perpendicular to the road. At the transition to the engineering structure a 15 metre long transitional section of asphalt is constructed between the CRCP and the head joint of the engineering structure.

EXECUTION AND CONSTRUCTION DETAILS

Placement of longitudinal reinforcement

The reinforcement is positioned on an even, clean asphaltic working platform. The placing and positioning of the reinforcement is done manually. The transverse reinforcement rods of 12 mm diameter is placed at an angle of 60° to the longitudinal axis. The longitudinal reinforcement (ø 20 – 180) has an overlapping length of 0.70 meter. The longitudinal reinforcement is fastened to truss shaped interval spacers using wire ties. Rods of 16 mm diameter which come in 14 metre lengths can easily be put in position. Points for attention to be heeded when positioning reinforcement are:

- the dimensioning and height at which reinforcement is positioned
- the number of ties must be sufficient to prevent horizontal movement [5]
- the bars should not be weaved in an ordered pattern to avoid crack clusters
- the working platform should be clean prior to pouring concrete

The placing of reinforcement takes more time than paving. The reinforcement should be put in place over at least the full length of a work section of one day's work production in advance. If possible the reinforcement should be positioned over the entire work section at once before the slip form paver is deployed.



Figure 3 Placement of reinforcement bars

End structures and connections

The pavement end structures impede expansion movement either entirely or at least partially and absorb the stresses produced or offer enough space to allow for any (residual) movement.

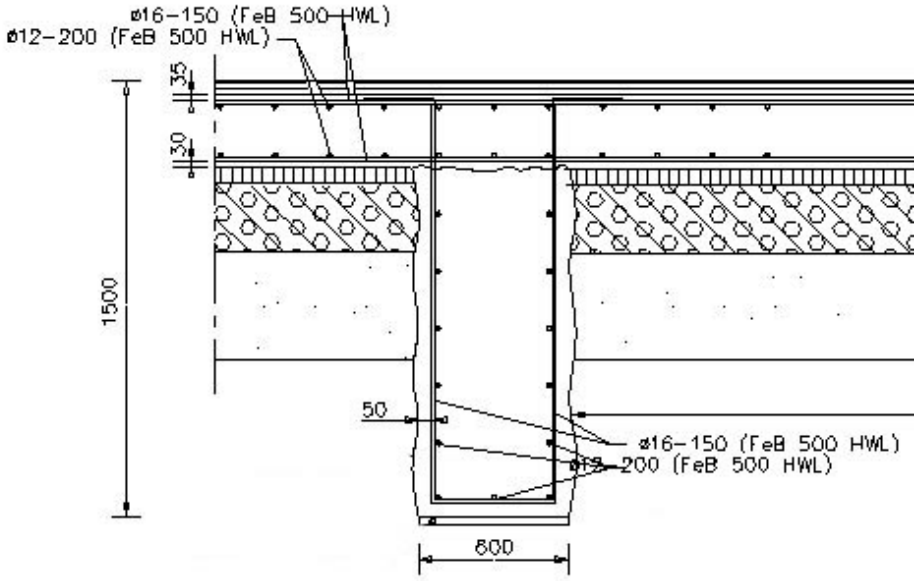

Figure 4 Detail of anchor which prevents CRCP end movement (dimensions in mm)

Joints

With continuously reinforced concrete pavements the transverse joints so characteristic of non-reinforced concrete are conspicuously absent. However a number of joints are required in certain constructions, for example where the concrete pour-area is wider than 5 metres. In this direction, the pavement is not reinforced. A construction joint may also be applied longitudinally between two separate pour-sections.

Longitudinal construction joint

Depending on the width and work space available it is not always possible to lay the CRCP over the full width. It is not unusual to lay the pavement in two or more separate strips. The joint needed where a strip of pavement is laid adjacent to a previously laid section or where it adjoins a series of existing sections of concrete paving is referred to as a construction joint. The longitudinal construction joint is constructed as a straight vertical joint. The tie-bars have the same diameter as the transverse reinforcement bars Ø 12 mm and are 800 mm long. The tie-bars are placed at intervals of 1000 mm apart at the joint between two traffic lanes with entrance and exit slip roads and a hard shoulder. The tie-bars are placed in the freshly laid concrete of the section which was poured first or they are bored and grouted. Crack inducement is prevented by the even distribution of stress. The tie-bars are covered by a synthetic coating in the middle to prevent corrosion. In this way optimal adhesiveness is achieved and shearing is prevented. The longitudinal joint is sealed with a bituminous joint filler or sealant.

Longitudinal contraction joint

When the width of concrete pour is greater than 5.0 meters a contraction joint is required. The application of a longitudinal contraction joint is preferred to a construction joint because this type of joint is less susceptible to deterioration or damage and is therefore subject to less maintenance. For this reason it is also worth recommending that the pavement be constructed over a broad section of concrete pour, after which a longitudinal contraction joint may be sawed or a synthetic strip may be applied.

Transverse construction joint

At the end of a day's construction work or during a temporary halting of work lasting more than a few hours, a transverse construction joint may be applied. No additional steel is added to this joint. The following (specification) requirements may be set for making this type of joint:

- longitudinal reinforcement should be unbroken and not be discontinued;
- transverse reinforcement should not be discontinued;
- the joint should be applied exactly perpendicular to direction of concrete pour;
- the joint should be constructed vertically in relation to the road surface.



Figure 5 Photo of a transverse construction joint.

Methods of construction

The application of a single carriageway width of concrete pour section, with sawed or cut longitudinal contraction joints, is preferred to pouring two separate traffic lanes with a longitudinal construction joint between them. Because the reinforcement is laid ahead of the paver and the fresh concrete is finished behind the paver, the concrete is introduced to the work via a 'side feeder'. A works road is needed alongside the construction work for transporting and 'feeding'. If there is no space for a works road, then the highway has to be laid in two strips. Prior to the application of the CRCP the anchor beams are poured. Instead of the stiffer consistency 1 mortar of the paver, the mortar is made according to consistency range 2. The consistency range relates to the workability of the mortar. The anchor beams are positioned a few days before up to the underside of the concrete pavement slab. The advantage of this is that the lane can be used as a works access road up to the day that construction work is completed.
The designer has to realise that this type of concrete construction presents other problems than those experienced on roads constructed in asphaltic concrete. Here the changes in transverse profile such as narrowing and/or (bend) widening is more difficult to realise and always require extra attention.



Figure 6 The slipform paver in action: cement feed by side-feeder and bucket feed.

Follow-up treatment and subsequent maintenance

Following the application of a concrete pavement the newly-laid and fresh concrete will have to be protected from drying out and exposure to environmental conditions. By instigating follow-up treatment (retarding the rate of evaporation) the 'burning' of the pavement surface (inadequate hydration due to a lack of water) and excessively rapid shrinkage development are avoided. Experience has shown that, with regard to the adhesion of the open textured asphaltic concrete or the porous wearing course, application of a plastic foil is preferable to spraying a post-treatment agent based on paraffin. Besides protecting the concrete from dehydration it must also be protected against the effects of weather and temperature fluctuation. If the temperature were to drop below freezing point during the curing phase (for example at night when there is a clear sky), then newly poured concrete should be covered by insulation layers to protect it from the threat of frost action. Apart from in winter conditions, concrete surfaces should be insulated for the first three to five days after pouring if the temperature range between average day and night temperature is greater than 10 to 12° C. In this way the temperature of the pavement can be controlled better, thereby reducing the risk of cracking.

Opening to traffic

Once the concrete has hardened sufficiently, the concrete pavement can be open for use. However, the Dutch Standards offer no definitive requirements. As a guide the following timeframes can be maintained:

- No traffic or pedestrians should be allowed on the pavement during the first 24 hours;
- Pedestrians and cyclists may be granted access after 24 hours;

- After 48 hours private cars and light motor vehicles with only two axles and having a maximum weight of 1500 kg may be allowed on the new pavement;
- After 7 days or at a compressive strength of 70% of the required characteristic compressive strength other traffic may then be allowed onto the new pavement.

These timeframes must be regarded as minimum requirements and must extended when there are unfavourable weather conditions. It is vital to keep the pavement clean during the first few weeks after completion of construction – especially when the longitudinal joints have not yet been cut open and sealed – so that ingress of chippings and stones is prevented. In addition it is recommend to carefully apply salt and that no thawing agents are deployed during the first winter.

REFERENCES (all in Dutch)

1. Standaard RAW Bepalingen 2000, CROW, Ede 2000
2. Het wegdek gecorrigeerd op akoestische eigenschappen (CROW publicatie 133). CROW, Ede, 1999.
3. Fuchs. F en A. Jasienski.: "Punch-out" op Belgische autosnelwegen van doorgaand gewapend beton : Oorzaken, gevolgen en remedies. Febelcem; OCW, Brussels, 1997, - 22 p.
4. Orval, L.H.G.J en G. Veer.:Duurzame wegdekken voor de toekomst : Verbreding en verbetering A12 gedeelte Bunnik - Lunetten in doorgaand-gewapend beton. Betonwegennieuws: 105 (januari 1997), p. 3-8
5. NEN 6722: Voorschriften Beton Uitvoering (VBU 1988), NNI, Delft, 1988.
6. Handleiding Wegenbouw: Ontwerp verhardingen. Ministerie van Verkeer en Waterstaat, Directoraat-Generaal Rijkswaterstaat, Dienst Weg- en Waterbouwkunde. Delft, december 1998.