CONCRETE PAVEMENTS AT THE MUNICH AIRPORT: DESIGN, CONSTRUCTION AND PERFORMANCE

Rupert Springenschmid
Technical University of Munich, Baustoffinstitut
Baumbachstrasse 7
D-81245 Munich, Germany

Rudolf Hessler
Munich Airport Authority
Civil Engineering Dep.
PO Box 231755
D-85326 Munich, Germany

Walter Fleischer
WALTER – HEILIT Verkehrswegebau GmbH, Headquarter
Klausenburger Strasse 9
D-81677 Munich, Germany

ABSTRACT

A new airport was built at Munich between 1985 and 1992 (Fig. 1). Two 60 m wide and 4,000 m long runways, as well as all taxiways and aprons were given a two-layer, non-reinforced concrete pavement with doweled transverse joints (i. e. jointed plain concrete pavement, JPCP), using the slipform construction technique. The aircraft movement areas in concrete have stood the test of time extremely well. Some 20 million passengers having used the airport in 2000, therefore a second terminal and a second apron are needed. The apron will be constructed also using the "Munich construction method", which has been the model for other German airport, too. The only modification concerns joint filling: Polysulfide-based compounds will replace bituminous joint fillers in the aircraft parking areas – where aircraft are refueled.



Fig. 1: General view of the Munich airport during construction

INTRODUCTION

Munich Airport was built from scratch approx. 30 km north / east of the Bavarian capital's center and inaugurated in May 1992. Phase I was designed for a traffic volume of 20 to 25 million passengers per year. During the year it opened, the traffic volume attained 12 million passengers. Today, with 23 million passengers, Munich Airport (Fig. 1) is the second largest in Germany, 9th in Europe and 40th worldwide. As the number of passengers is increasing by more than 1.5 million every year, Phase II is currently under way with the construction of Terminal 2, which will have a capacity of some 18 to 20 million passengers a year and is scheduled to open in 2003.

The Phase I aircraft movement areas consisted of two parallel runways, each 4,000 m long and 60 m wide, with the associated taxiway systems and aprons for passenger handling, cargo, maintenance, general aviation and a heliport (Fig. 2) covering a total paved area of approximately three million m², 2.5 million m² of which have concrete pavements [1]. Previous experience has been taken into consideration for the some 400,000 m² large Phase II apron, which is currently under construction.

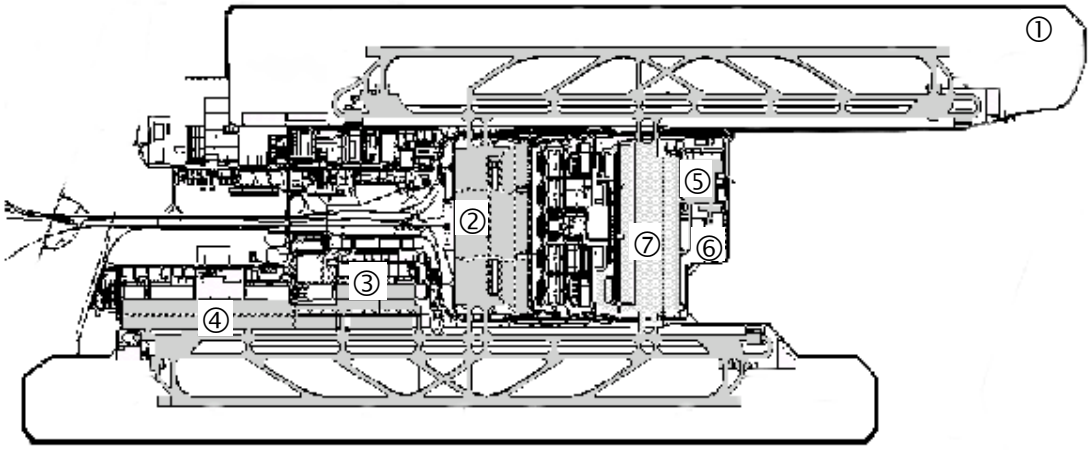

① Runway Systems N+S
② Apron PAX
③ Apron CARGO
④ Apron MAINTENANCE
⑤ Apron GENERAL AVIATION
⑥ HELIPORT
⑦ Apron PAX, Stage 2

Fig. 2: Munich airport – general layout

DESIGN

All aircraft movement areas have been designed for a load-bearing capacity as per PCN 90. The supporting medium was compacted to a maximum (Proctor) density of 103 percent. The degree of compaction was checked over the entire area (i.e. not just spot checks) using the recently developed dynamic compaction test [1]. A cement-bound base, with a minimum 28-day compressive strength of 6 N/mm², was placed between the supporting medium and the concrete pavement. The runway concrete pavements are 360 mm thick in the middle, at the edges 260 mm (Fig. 3), and those of the aprons 400 mm. Besides the traffic loads – quadruple-gear with a maximum wheel load of 4 x 225 kN = 900 kN -, a curling caused by temperature gradients of 0.07 K/mm for 30 hours per year was also taken into account. Since the bending stresses due to changes in temperature are higher the greater the slabs are, the spacing between joints was limited to a maximum of 5 m. Endurance calculation was performed according to Miner's theory and gave maximum bending stresses of 3.76 N/mm² [1,2]. The bond between the cement-bound base and the concrete was not taken into consideration in the calculation. The small spacing between joints results in reduced changes in the joint gap widths.

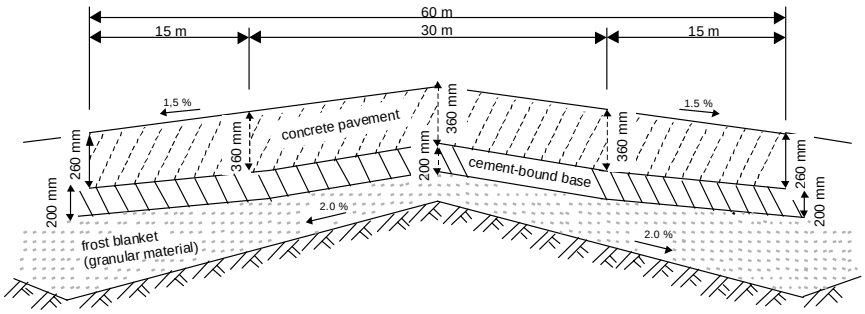

Fig. 3: Typical cross section of the runway of the Munich airport

The pavements were placed as jointed plain concrete pavement (JPCP). The dowels in the transverse joints (Fig. 4) and the sinusoidal profile of the longitudinal construction joints (Fig. 5) serve to transmit loads across the joints. The transmission of transverse loads was tested by subjecting sample areas to a wheel load of 15 tons on doweled transverse joints and on longitudinal joints with a sinusoidal profile, as well as on keyway joints. All three construction methods resulted in extremely small vertical movement of approximately 0.06 mm.

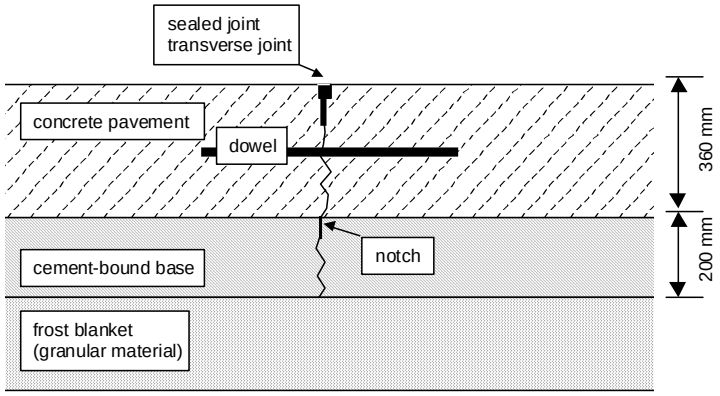

Fig. 4: Sealed, doweled transverse joint in the runway concrete pavement, the cement-bound base is notched underneath the joint

To prevent the joints at the periphery of the concrete pavement from opening, the two longitudinal joints that were nearest to the edge were anchored (Fig. 5). Expansion joints were only provided along different concreting directions of the pavement (for example between the runways and taxiways), next to the slotted gutters on the aprons, and at fittings in the concrete pavement. The joints were cut to a depth of approximately 30 percent of the concrete pavement at the earliest possible time, and subsequently expanded 8 mm at the surface for joint sealing or filling with neoprene sections. An 80 mm deep notch was cut into the cement-bound base underneath all concrete pavement joints when the base was placed (Fig. 4,5), to prevent wild cracks in the cement-bound base and therefore reflective cracks in the concrete pavement.

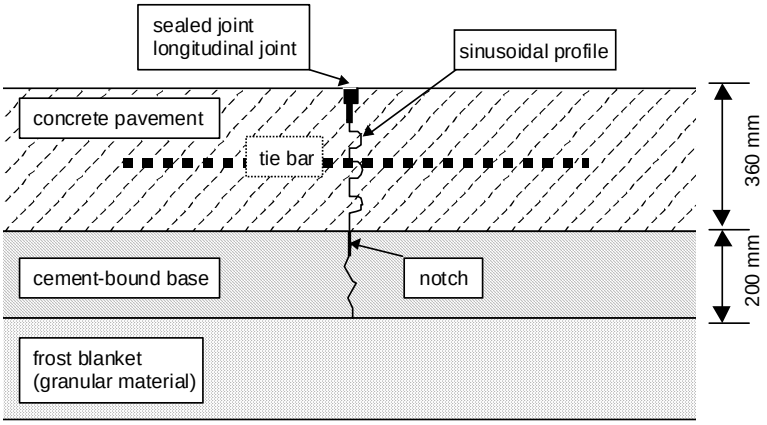

Fig. 5: Sealed, longitudinal joint in the runway concrete pavement, the cement-bound base is notched underneath the joint;

- *longitudinal construction joints were constructed with a sinusoidal profile,*
- *longitudinal contraction joints nearest to the edge were anchored by tie bars*

The feeder cables for the navigation lights were laid in conduits (diameter 110 mm and 150 mm). For this purpose, the cement-bound base was cut open after hardening using a milling machine, and then refilled with flow concrete after the conduits were laid. Holes were then drilled through the pavement concrete with diamond bits to install the navigation lights (Fig. 6). Thanks to extremely precise measurement, the feeder conduits for almost all 6,000 lights - only ten misses - were struck first time during the drilling operations.

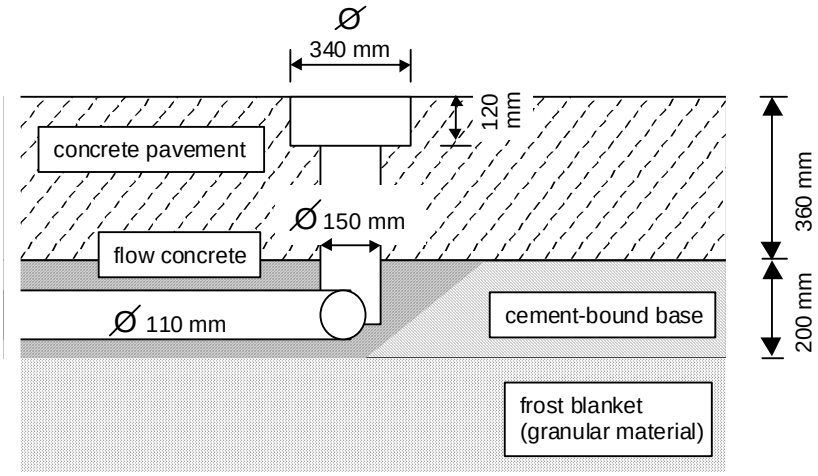

Fig. 6: Conduits for feeder cables for the navigation lights were laid in flow concrete in the cement-bound base;
to install the navigation lights holes were drilled through the concrete pavement

Crushed aggregate have been specified in order to have a better long time behavior of the concrete surface. Since crushed aggregate are expansive in the Munich region as compared to gravel the concrete was placed wet-in-wet in two layers. Size 4/8, 8/16 and 16/32 mm crushed granite aggregate was used for the 140 mm top concrete layer, and gravel size 4/8, 8/16 and 16/32 mm from nearby gravel pits for the bottom layer [3]. The resistance to freezing and de-icing agents by the crushed granite aggregates had to satisfy extremely stringent requirements. Weight loss after 100 freezing cycles in water containing 1 percent of de-icing agent (glycol, urea or Frigantin) was only about 1 percent. The concrete contained 340 to 360 kg of Portland cement per m^3. The cement had a low alkali equivalent between 0,5 and 0,6 % and a cracking temperature of just 10 °C [4]. This low cracking temperature led to very little cracking susceptibility of the concrete before cutting the joints, so that they were able to be cut just in time. Only 12 slabs out of the overall concrete area of some 2.5 million m^2 showed cracks, and these are attributable to the joints having been cut too late or to other causes.

The concrete strength had to be higher than that of the pavement concrete normally used for expressways (Autobahns) in Germany. The required 28-day compressive strength was an average cube strength of 50 N/mm^2, corresponding to a cylinder strength of 5,500 psi. The bending tensile strength of a 150 x 100 x 700 mm^3 beam to DIN had to be at least 6 N/mm^2 when loaded at the beam center. A test conducted on an ASTM beam would give a somewhat lower strength. The specified minimum air void content of the concrete was 3.5 percent, the a3verage air void content 4.0 percent [1,4]. The use of a plasticizer helped keep the water content low (water-to-cement ratio between 0.40 and 0.42). The most important test results are provided in Table 1.

	test result (mean value)	demand
bottom layer concrete		
• air void content	3.9 %	> 3.5 %
• bending tensile strength	6.4 N/mm²	> 6 N/mm²
top layer concrete		
• air void content		
▪ fresh concrete	4.6 %	minimum 3.5 %, daily average 4.0 %
▪ core	4.8 %	
• bending tensile strength	6.6 N/mm²	> 6 N/mm²
• compressive strength (cores)	57 N/mm²	> 45 N/mm²

Table 1: Important test results of the bottom layer concrete and the top layer concrete from tests of the Client [1]

According to the contract the concrete strengths had to be tested at a concrete age of 28 days. Because airport operations began several years after placement of the concrete, the contract has been modified and the concrete strengths were tested after 56 or 90 days.

CONCRETE PRODUCTION

Since the tender documents allowed both asphalt and concrete pavements for the aircraft movement areas, the tenderers offering concrete pavements had to develop technologically equivalent, if possible better, and more cost-effective alternatives to asphalt construction in order to be awarded the contract [3]. Three alternative tenders were of key importance:

(1) Concrete placement in slipforms instead of stationary formwork;
(2) Placement width 15 m instead of 7.50 m;
(3) A two-layer construction technique, requiring crushed granite aggregates with very high freezing and de-icing agent resistance and skidding resistance for the top layer only, while cheaper gravel could be used for the bottom layer.

The construction period agreed in the contract necessitated an average placement rate of at least 5,000 m² of concrete per day. For this reason, two mixing plants with a capacity of 140 m³ per hour of top concrete and 220 m³ per hour of bottom concrete were set up on the airport site over the entire construction period, allowing the wet-mix volumes required for a placement width of 15 m, a placement thickness of 360 mm and a placement rate of about 1 m per minute to be mixed. In this construction project, continuous mixing plants (Fig. 7) have proven successful where the base materials are fed in a continuous flow through special weigh feeders into the mixer where they are mixed and conveyed to the discharge [4,5]. A comparison with previously used batch mixing plants showed that concrete produced in continuous mixing plants resulted in the same average values and standard deviations in terms of bending tensile strength and air void content as concrete from batch mixing plants [4]. In some cases, the standard deviations were even lower.

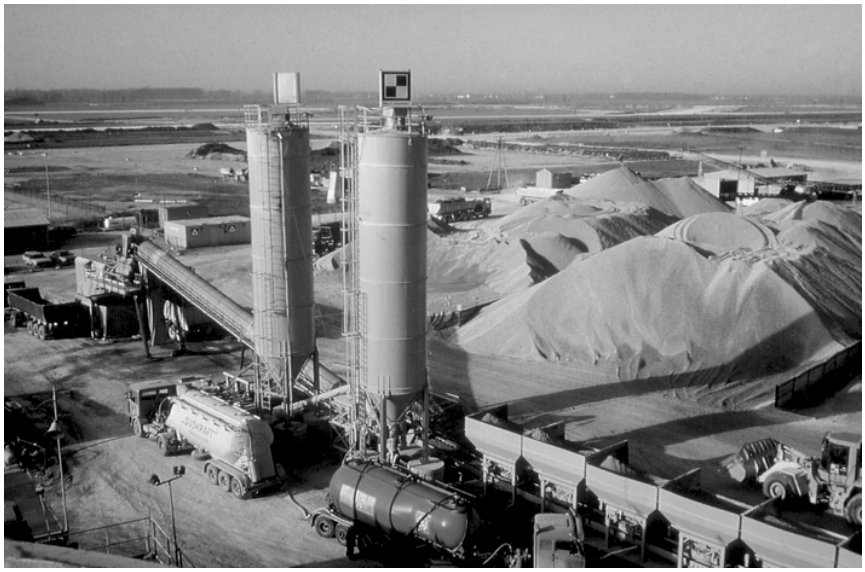

Fig. 7: Continuous mixing plant which can produce up to 220 m³ per hour of high quality concrete; stockpiles of the aggregates in immediate proximity to the mixing plant

To obtain a daily output of 3,000 m³ of wet-mix, around 6,000 tons of aggregates and approximately 1,000 tons of cement had to be delivered to the construction site every day. This corresponds to about 250 truck loads per day. The aggregates were stockpiled on the site in immediate proximity to the mixing plants (Fig. 7). Reliable delivery by rail of the cement to a container terminal in immediate proximity to the construction site meant that for the two mixing plants four silos with a capacity of 100 tons each were sufficient for storage.

CONCRETE PLACEMENT

The two-layer concrete pavement was placed by two separately operated slipform pavers (width up to 15 m, Fig. 8) that were specially designed and built for construction projects of this type [3,5,6], great importance being placed on rapid setting-up and dismantling without the need for self-propelled cranes, and on easy transfer to conventional flat-bed trucks with a road permit.



Fig. 8: Construction of the concrete pavement of the runway in two layers with a special slipform paving train consisting of two slipform pavers; here unloading the top concrete from trucks and spreading in front of the second paver by an excavator

The bottom concrete was dumped by trucks in front of the bottom concrete paver (Fig. 8,9) on the cleaned and wetted cement-bound base, spread across the base, placed to the required thickness and compacted by internal vibrators. The dowels and tie bars were vibrated into the compacted bottom layer by the bottom concrete paver.

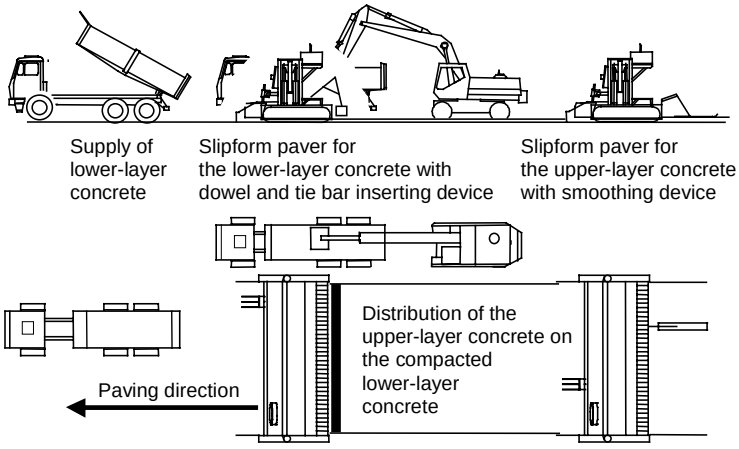

Fig. 9: Slipform paving train consisting of two slipform pavers for construction of concrete pavements in two layers; the concrete for the top layer is placed in front of the second paver by an excavator from the side

Immediately following this, the top concrete was unloaded from trucks by excavators on both sides of the strip to be placed and spread evenly in front of the top concrete paver on the compacted bottom layer (Fig. 8-10). The top concrete paver placed the top concrete wet-in-wet at the specified thickness and elevation on the bottom layer, after which the concrete was again compacted by internal vibrators. The top concrete paver then smoothed the concrete surface lengthwise and crosswise. In order to obtain the required skidding resistance from the start, the wet concrete surface was broom finished crosswise by a self-propelled working platform. Height and directional control of the entire paving train was effected electronically by means of guidewires.

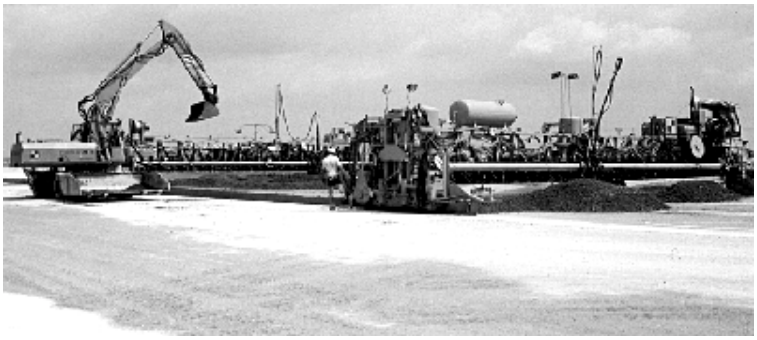

Fig. 10: Construction of the concrete pavement for the runway in two layers in slipform technology, placement width 15 m; here construction of the first strip as a "pilot strip" with sinusoidal longitudinal construction joints (see Fig. 5)

Curing was carried out in two steps: First, a liquid curing compound was automatically sprayed from the working platform onto the wet concrete surface. At high temperatures, low humidity and high wind velocities, the Client requested that water be sprayed on additionally which was paid separately. Spraying on water prevented the top concrete from excessive heating due to solar radiation, that would otherwise have caused high temperature stresses [7]. During the first days of concrete placement, tents were dragged behind the paving train (Fig. 11). After this, the tents were no longer used; instead, the concrete placement was suspended sufficiently in advance of rainfall [1].

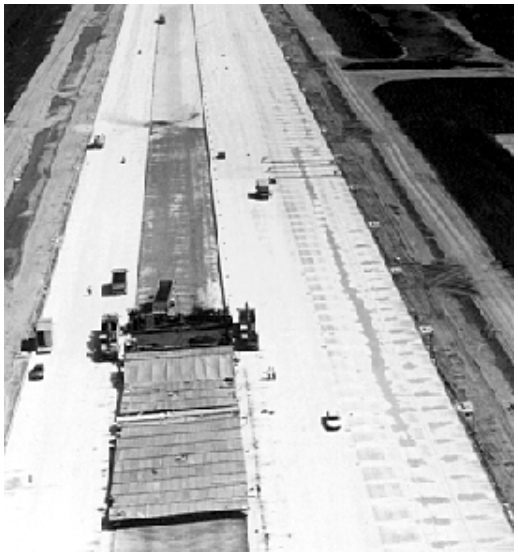

Fig. 11: *Construction of the concrete pavement for the runway in two layers in slipform technology; tents were only dragged behind the paving train during the first days of concrete placement*

During the entire concrete construction period from spring 1988 to autumn 1991, none of the concrete pavements suffered any damage from rainfall that required slabs to be replaced or repaired. In fact, the slabs damaged by rain have proven over time to be as effective and durable (notably in respect of resistance to freezing and de-icing salts and skidding resistance) as the undamaged surfaces.

The quality and cost-effectiveness of the construction work were raised by firstly constructing every second strip as a "pilot strip" and placement width 15 m with the aid of slipform technology (Fig. 10,12). The intermediate strips were then placed without the need for any side formwork. The longitudinal compression joints were formed by means of sinusoidal formwork (Fig 5,12). Smooth formwork was only used at the sides. The special slipform pavers (Fig. 8-11) deployed for two-layer, 15 m wide placement in slipforms [3,5,6] enabled placement rates of 10,000 m² of aircraft movement areas per day, meaning approximately 3,600 m³ of concrete. Even oblique-angled connections of high speed exit taxiways or taxiway intersections with vertical curve radii of 30 m were constructed exclusively with the aid these slipform pavers, allowing the number of slabs constructed without pavers to be minimized.



Fig. 12: Longitudinal construction joint of a "pilot strip" with sinusoidal profile, constructed with a slipform paving train, placement width 15 m

FIELD LABORATORY

The Client, Flughafen München GmbH, commissioned the Building Materials Institute of Technical University of Munich (Prof. Springenschmid) to check the technological properties of the cement-bound base and concrete [1,4]. For this purpose, a field laboratory staffed by four to six people was set up at the airport. The cement-bound base and concrete contractors additionally had their own laboratory.

Sand, gravel and crushed granite aggregates were visually inspected prior to unloading on the site and, where necessary, subjected to laboratory tests. Truckloads requiring inspection arrived on average every three to five minutes. As the crushed aggregate was supplied by six different plants, the granulometry had to be stringently regulated to ensure uniform concrete production.

A total of 360 concrete test cylinders were produced from the gravel-sand-cement mix (compacted to Proctor) for compressive strength testing of the cement-bound base. Some 6,000 bulk density and air void content tests were carried out on the wet concrete. 750 series of three con-

crete beams each were needed for the bending tensile strength tests. More than 300 cores were drilled from the finished pavement to measure pavement thickness. The cores were subsequently tested to determine either 90-day compressive strength or air void content and spacing factor. Table 1 gives the test results.

Testing of the properties of cement-bound base and concrete by a laboratory of the Client and, in addition, by laboratories of the contractors, has proven to be highly successful.

BEHAVIOR IN SERVICE, MAINTENANCE

The priority criteria in assessing the aircraft movement areas are air traffic safety and users' experience. The concrete pavements at the Munich Airport have stood the test extremely well in terms of safe take-off and landing on the runways and comfortable taxiing on the taxiways, especially with regard to the following key parameters [1]:

- Good skidding resistance over time (Fig. 13);
- Highly uniform level with deviations far below the tolerance limit (determined by measurements using the high-speed road monitoring system);
- High resistance of the concrete to deformation (no ruts or lateral displacements in aircraft parking aprons);
- Bright color of the concrete surface; important especially at night and in adverse weather conditions or poor visibility;
- No problems have been encountered so far with regard to brake reaction and aquaplaning.



Fig. 13: The concrete pavement for the aircraft movement areas of the Munich airport still provides good skidding resistance; Saab Friction Testers are used for testing the skidding resistance of aircraft movement areas in Germany

Besides the high quality of the concrete pavements, design parameters such as the layout of the aircraft movement area systems, optimized curve radii, and balanced longitudinal and transverse gradients naturally also contribute to the facility's positive performance properties.

In the assessment, the condition of the concrete after an operating period of around nine years ranks second:

- To date, the concrete slabs covering an area of 2.5 million m² display only negligible design or construction-related damage. Only two slabs at an expansion joint at the apron-runway transition have so far required repair.
- The mechanical stresses resulting notably from the deployment of cleaning and winter service equipment were absorbed by the concrete pavement almost without damage. The minimal edge erosion is generally easily repaired with the aid of a special plastic mortar, the principal aim being to prevent contaminated water from penetrating into the subsoil.
- Removing the abraded rubber within the touchdown zones of the runway by high-pressure water jetting subjects the concrete to special stress. However, after nine years of operation the friction values in these areas are only about 10 to 15 percent lower than those in the other runway areas where no rubber abrasion occurs. This extreme resistance is due to the presence of twice crushed and screened granite aggregates in the top concrete layer, solid embedding of these aggregates in the hardened cement paste and, finally, to the adequate cement content, low water-to-cement ratio and good curing.
- To date, the concrete surfaces have not suffered any damage from de-icing agents.
- The two joint-filling compounds used have performed differently:
  1. After around nine years of traffic stress, the hot joint sealing compound used in the runways and taxiways has now become brittle, cracked and has dissolved in some areas. After spot repair work between 1996 and 1998, the hot joint sealing is now being gradually replaced on a major scale, again by hot joint sealing compound.
  2. Basically, the method of using neoprene joint filler sections for the aprons has stood the test. All the repair work and section replacements that were required in some areas were due solely to improper installation and were therefore carried out under warranty by the jointwork contractor at his expense. This shows that this construction method necessitates stringent quality control and assurance during the construction period.
- On the strength of previous experience and owing to stricter leakproofness requirements (groundwater contamination by de-icing agents), joints in the aircraft parking areas – where aircraft are refueled – have been sealed with polysulfide-based two-part fillers since the last two years. This method, which is also based on the experience of other German passenger airports, is also being used for the Phase II aprons.
- Uneven spots have already appeared during construction around the slotted gutters installed in the apron for drainage. The reason for this is the slope of the slotted gutter surfaces towards the slot and differences in level between the slotted gutters, the lateral expansion joints and the concrete pavement. This detail will be improved in the future.

CONCLUSIONS

The aircraft movement areas constructed at the new Munich airport between 1989 and 1991 and equipped with a concrete pavement have stood the acid test extremely well after about nine years of operation and approximately 320,000 flights per year.

This excellent performance is imputable to:

- Careful planning (determining local conditions, defining needs, choosing a suitable construction method, calculation and sizing in line with needs);

- Execution of the construction work by experienced contractors and sufficient quality control and assurance;
- Efficient and systematic maintenance.

Owing to this positive performance by the concrete aircraft movement areas over the past nine years, the "Munich construction method" has been the model for subsequent construction and resurfacing projects in aircraft movement areas at the German civil airports of Frankfurt, Leipzig, Düsseldorf, Cologne, Hamburg and Dresden, at the civil airports of Kiev, Ukraine and of Prague, Czech Republic, for example, as well as at the US Armed Forces airbase in Ramstein near Frankfurt, Germany. An almost identical method will be used for a second apron, which is to be constructed at Munich airport from 2000 to 2002.

REFERENCES

[1] Hessler, R.: Betondecken auf dem Flughafen München – Konzeption, Bau und Bewährung. Betonstraßentagung 1997. Forschungsgesellschaft für Straßen- und Verkehrswesen, Schriftenreihe der Arbeitsgruppe Betonstraßen, H. 23. Kirschbaum Verlag, Bonn 1999, pp. 66-73

[2] Dold, E.: Stand der Planung und Bauausführung beim neuen Flughafen München 2. Betonstraßentagung 1987. Forschungsgesellschaft für Straßen- und Verkehrswesen, Schriftenreihe der Arbeitsgruppe Betonstraßen, H. 18. Kirschbaum Verlag, Bonn 1988, pp. 60-65

[3] Bittner, W.: Neue Maßstäbe beim Bau von Flugbetriebsflächen – Flughafen München II. Betonstraßentagung 1991. Forschungsgesellschaft für Straßen- und Verkehrswesen, Schriftenreihe der Arbeitsgruppe Betonstraßen, H. 20. Kirschbaum Verlag, Bonn 1992, pp. 69-70

[4] Springenschmid, R.; Fleischer, W.: Technologische Kontrollprüfungen an Beton und HGT für die Flugbetriebsflächen des Flughafens München 2. Betonstraßentagung 1991. Forschungsgesellschaft für Straßen- und Verkehrswesen, Schriftenreihe der Arbeitsgruppe Betonstraßen, H. 20. Kirschbaum Verlag, Bonn 1992, pp. 71-74

[5] von Wilcken, A.; Fleischer, W.: The use of slipform technique for traffic infrastructure construction. 8th International Symposium on Concrete Roads, 13. – 16. September 1998 Lisbon. Proceedings, Theme II, Progress in Concrete Road Materials and in Construction Pro??cesses, pp. 89-97, AIPCR – PIARC 1998

[6] Bittner, W.: New standards in the construction of aircraft movement areas. 7th International Symposium on Concrete Roads, 3. – 5. October 1994 Vienna. Proceedings, Session 7, Airfields, Heavy Duty Areas, Railways, pp. 5-9, AIPCR – PIARC 1994

[7] Springenschmid, R.; Hiller, E.: Influence of temperature during curing on stresses in concrete pavements. 8th International Symposium on Concrete Roads, 13. – 16. September 1998 Lisbon. Proceedings, Theme II, Progress in Concrete Road Materials and in Construction Processes, pp. 259-263, AIPCR – PIARC 1998