Prestressed Concrete Pavement Technology Update

by

Shiraz D. Tayabji, Ph.D., P.E.
Regional Manager
Construction Technology Laboratories, Inc.
5565 Sterrett Place, Suite 312
Columbia, MD 21044
Phone: 410-997-0400; Fax: 410-997-8480
E-mail: stayabji@ctlgroup.com

Ernest J. Barenberg, Ph.D., P.E.
Professor, Department of Civil Engineer
University of Illinois
205 North Mathews
Urbana, IL

Wade Gramling, P.E.
CGH Engineering, Inc.
4913 Old Gettysburg Road
Mechanicsburg, PA

and

Paul Teng, P.E.
Federal Highway Administration
6300 Georgetown Pike
McLean, VA 22101

ABSTRACT

Use of prestressed post-tensioned concrete pavements has been suggested for many years to obtain extended pavement service life in a cost-effective manner. Conventional concrete pavements are designed on the basis of concrete's relatively low flexural and tensile strengths without effectively utilizing the natural advantages of its high compressive strength. In prestressed pavements, precompression in the concrete due to prestressing allows for increased allowable tensile and flexural stresses, thereby permitting use of thinner and longer concrete slabs. Transverse joints in prestressed pavements may be spaced at about 91.5 to about 183 m.

Although several experimental prestressed pavements were constructed in the US, the US experience is based on six large-scale highway projects (Virginia, Pennsylvania (2), Arizona, Mississippi, and Texas), and two airport projects (Chicago O'Hare and Rockford, Illinois), all constructed since 1971. The oldest project, built along an access road to Dulles International Airport near Washington, DC, is almost 30 years old and the youngest project, built along a

taxiway at Greater Rockford Airport in Northern Illinois is about 7 years old. All of these projects, except for the one in Arizona, are still in service. The Arizona highway project was reconstructed recently as part of major intersection realignment at the project site.

This paper presents an update on the performance of these eight prestressed pavements. Design, construction, joint hardware and prestressing details are summarized for each project. This is followed by a discussion of their performance to date, including distress development, ride quality, structural testing, and repairs made. Although, there appears to be a need to develop improved joint hardware details, the performance evaluation indicates that prestressed pavements are a viable alternative for pavement rehabilitation or reconstruction.

INTRODUCTION

Use of prestressed post-tensioned concrete pavements has been suggested for many years to obtain extended pavement service life in a cost-effective manner. Conventional concrete pavements are designed on the basis of concrete's relatively low flexural and tensile strengths without effectively utilizing the natural advantages of its high compressive strength. In prestressed pavements, precompression in the concrete due to prestressing allows for increased allowable tensile and flexural stresses, thereby permitting use of thinner and longer concrete slabs. Transverse joints in prestressed pavements may be spaced at about 91.5 to about 183 m.

Although several experimental PCP have been constructed in the U.S., the U.S. experience is based on six large-scale experimental highway projects (Virginia, Pennsylvania [2 projects], Arizona, Mississippi, and Texas) and two airport projects (Chicago O'Hare and Rockford, Illinois) built in the U.S., all constructed singe 1971. A speedway project was constructed in Bristol, Tennessee but is not discussed in this paper. The oldest project, built along an access road to Dulles International Airport (DIA) near Washington, DC, is 30 years old and the youngest project, built along a taxiway at Greater Rockford Airport in Northern Illinois is about 7 years old. The highway project constructed in Arizona was reconstructed during 1997 as part of major intersection realignment at the project site. The Dulles Airport project, the Mississippi project, and the older project in Pennsylvania have been flagged for reconstruction in the near future.

The use of PCP has not been widespread in the U.S. However, based on the low maintenance performance of many of the experimental projects, PCP offers a viable cost-effective alternative for new construction and for rehabilitation. This paper presents an update on the performance of the eight experimental projects. An overall background to PCP technology is presented, followed by summaries of specific design, construction, joint hardware, and prestressing details for each project. The current condition/status of these projects is also discussed.

BACKGROUND

Prestressed pavements were first investigated during the 1940s. The historical development of prestressed pavement technology is summarized in Ref. 1. During the 1960s and 1970s, considerable interest in use of PCP for highways was developed as a result of the work of Bengt Friberg (Ref. 2). He developed the design recommendations and testing plan for the DIA access

road project built during 1971 and participated in preparation of several documents related to design of PCP as part of American Concrete Institute's (ACI's) Committee 325 on Concrete Pavement (Ref. 3). An updated version of one of those reports entitled, *Recommendation for Designing Prestressed Concrete Pavements* was published by ACI during 1988 (Ref. 4). As indicated previously, since 1971, six large-scale highway and two airport experimental PCP projects have been constructed in the United States.

The design of prestressed concrete pavement involves the following steps:

1. Selection of slab length.
2. Selection of level of prestressed to be applied at slab ends.
3. Computation of effective midslab prestress after accounting for losses due to slab/base friction, tendon friction, steel relaxation, and concrete creep and shrinkage.
4. Determination of the slab thickness after considering traffic and environmental loadings, available midslab prestress, and the support conditions.
5. Determining the jointing requirements to allow for large slab end movements and to provide desired load transfer across joints.
6. Selecting the prestressing tendon size (diameter) and spacing to achieve the desired stress level at slab ends. The U.S. experience is based on use of Grade 270 7-wire stress relieved strands for highway applications and use of threaded bar for one airport application.

The construction of prestressed concrete pavement involves the following steps:

1. Provision of low friction interface medium between the slab and the base, typically accommodated by one or two layers of polyethylene over a stabilized base or an existing pavement.
2. Placement of prestressing tendons at the right spacing and height.
3. Concrete placement using normal slipform paving equipment.
4. Application of up to 3 stages of prestressing, beginning the first stage within 24 hours of concrete placement. Typically, stressing is done from both ends for end of slab prestressing technique.
5. Construction of gap slabs if end of slab prestressing method is used to prestress the slabs. Gap slabs are provided to accommodate prestressing operations at slab ends and are typically 1.22 to 2.44 m long and heavily reinforced. Gap slabs are not needed if middle-of-the-slab-prestressing method is used.
6. Other concrete placement and finishing operations are carried out similar to conventional concrete pavement construction.

U.S. PCP Experimental Projects

Details for the six highway experimental projects constructed in the U.S. are listed in Table 1 and in Table 2 for the two airport projects. The earlier five highway projects were 152 mm thick with slab length ranging from 73 to 232 m. The most recent highway project in Pennsylvania

Table 1 – U.S. Highway Prestressed Pavements

State	Virginia	Pennsylvania1	Mississippi	Arizona	Texas	Pennsylvania2
Location	Dulles Int. Airport	Harrisburg	Brookhaven	Tempe	Waco	Altoona
Year Built	1971	1973	1976	1977	1985	1988/1989
Project Length, km	0.966	2.4	4.0	1.9	1.61	3.7
No. of Lanes	2	4	4	4	2	2
Slab Length, m	122 - 232	183	137	122	73, 134	122
Total No. of Slabs (2-lane wide)	6	26	58	30	18 @ 73 m 14 @ 134 m	30
Slab Thickness, mm	152	152	152	152	152 (overlay)	7.0
Base	152 mm cement-treated base	152 mm bituminous aggregate base	102 mm hot mix bitum. Concrete	102 mm lean concrete	102 mm AC over 305 mm PCC	127 mm lean concrete base
Subgrade CBR	3	4	20	3	****	
Soil Classification	clay	silty clay	sandy clay	silty clay	****	
Climate	wet, freeze-thaw	wet, freeze-thaw	wet, no freeze-thaw	dry, no freeze-thaw	dry, no freeze-thaw	wet, freeze-thaw

was 178 mm thick with 122-m slab length. The project at O'Hare Airport included two 122-m long slabs – one 203 mm thick, and one 229 mm thick. This project was constructed over an existing CRC pavement. The project at Rockford Airport was a 178-mm thick single 366-m long slab. All new projects were constructed over stabilized bases or lean concrete bases (LCB).

The prestressing details are given in Table 3 for the six highway projects and in Table 4 for the two airport projects. Typically, prestressing was applied using Grade 270 7-wire strands (tendons), either 12.7 or 15.24 mm in diameter. Tendon spacing ranged from 406 to 610 mm for the highway projects and 305 to 457 mm for the airport projects. The slab end prestressing ranged from about 1,380 kPa to about 3,312 kPa for the highway projects and was about 3,795 kPa for the Rockford Airport project. The slab end prestressing was used for all projects except the Texas project. At these projects, gap slabs with one or two active joints were used to accommodate the prestressing operations. At the Texas project, the midslab prestressing technique was used using a custom developed midslab anchor/coupler. Most of the projects also used two layers of polyethylene sheets to reduce slab/base interface friction.

Table 2 - Existing Airport Prestressed Pavements

City	**Rockford, Illinois**	**Chicago, Illinois**
Location	Greater Rockford Airport	O'Hare International Airport
Year Built	1993	1980
Project Length, m	366	244
No. of Lanes	1 – 23 m wide	1 – 46 m wide
Slab Length, m	366	122
Total No. of Slabs	1	2
Slab Thickness, mm	178	203, 229
Base	152 mm lean concrete over 152 mm granular subbase	51 mm sand asphalt over existing CRCP
Subgrade CBR	9	-
Soil Classification	silty clay	-
Climate	wet, freeze-thaw	wet, freeze-thaw

Table 3 - Existing Highway Prestressed Pavement Prestressing Details

State	Virginia	Pennsylvania1	Mississippi	Arizona	Texas	Pennsylvania2
Pavement Width, m	7.3	7.3	7.3	9.6	11.6	7.3
Slab Length, m	122 – 232	183	137	122	73, 134	122
Slab Thickness, mm	152	152	152	152	152	178
No. of Tendons	12	12	12	16	19 for 73 m slabs 29 for 134 m slabs	15
Tendon Spacing, mm	24	24	24	24	24 for 73 m slabs 16 for 134 m slabs	18
Tendon Diameter, mm	13	15	13	13	15	15
No. of Polyethylene Sheets	2	2	2	2	1	2
Gap Slab Used	yes	yes	yes	yes	no	yes
No. of Active Joints per Gap Slab	2	1	2	2	1 active joint/main slab	1
Stressing Location	slab ends	slab ends	slab ends	slab ends	midslab	slab ends
1st Stage Pressing	44.5 kN @ 6900 kPa	62.3 kN @ 6900 kPa	62.3 kN @ 6900 kPa	48.9 kN @ 8970 kPa	variable-up to 73.4 kN	69.4 kN @ 6900 kPa
2nd Stage Pressing	89.0 kN @ 13,800 kPa	208.6 kN @ 17,250 kPa	146.8 kN @ 17,250 kPa (5th day)	106.7 kN @ 16,560 kPa (2nd day)	206.4 kN (3rd day)	variable
3rd Stage Pressing	129.0 kN @ 20,700 kPa	****	****	137.9 kN @ 20,700 kPa (3.5 days)		208.6 kN @ 25,875 kPa
Slab End Stress, kPa	1,387	2,249	1,580	1,484	2,222 for 73 m slabs 3,333 for 134 mslabs	2,567

Table 4 - Existing Airport Prestressed Pavement Prestressing Details

State	Rockford, Illinois	Chicago, Illinois
Pavement Width, m	23	46
Slab Length, m	366	122
Slab Thickness, mm	178	203, 229
No. of Tendons	74	threaded bars (grouted)
Tendon Spacing, mm	305	457 (long.) 610 (trans.)
Tendon Diameter, mm	15.2	25.4 (long.) 22.2 (trans.)
No. of Polyethylene Sheets	2 (sealed at edges of roll)	2
Gap Slab Used	yes (for expansion joint)	No
No. of Active Joints per Gap Slab	1	N/A
Stressing Location	slab ends	Slab ends
1st Stage Pressing	137.9 kN @ 13,800 kPa	3 stage stress in long. Direction
2nd Stage Pressing	208.6 kN @ 23,460 kPa	
3rd Stage Pressing	N/A	single full stressing in trans. direction
Slab End Stress, kPa	3,850 (average) [2,167 (top), 5,499 (bottom)]	

Thickness Design Considerations

One of the warrants for use of PCP is that thinner concrete pavements can be constructed that may result in significant cost savings. In addition, the use of longer slab lengths and fewer transverse joints may result in significantly less maintenance effort over the 20 to 30 years of the initial service life of the pavement.

Several approaches have been suggested for thickness design of PCP (Refs. 4 and 5). Most of the design approaches are based on developing a minimum effective prestress at midslab of about 345 kPa throughout the service life of the pavement. An example computation of the midslab prestress is given in Table 5 from Ref. 5.

As shown in Table 5, slab base friction can account for a large portion of the prestress loss and therefore it is critical that the base be constructed to specified grade under tight tolerances and that a friction reducing treatment (double layer of polyethylene sheets) be used.

Table 5 – Prestress Calculations (Ref. 5)

Slab Thickness mm	178	203
Slab Length, m	76	107
Strand Diameter, mm	15.24	15.24
Strand Force, kN	182.4	182.4
Strand Spacing, mm	610	457
End of Slab Prestress, kPa	1,684	1,967
Prestress Losses		
Shrinkage, kPa	41.4	41.4
Creep, kPa	27.6	41.4
Relaxation, kPa	138	159
Strand Friction, kPa	269	428
Subbase Friction, kPa	690	966
Total Losses, kPa	1,166	1,635
Mid-Slab Prestress, kPa	518	331

Although no formalized procedures have been adopted for thickness design of PCP, five of the six U.S. highway experimental sections were constructed using 152 mm thick slabs irrespective of application type (new or overlay), traffic loading, and environmental considerations. Another factor to consider in slab thickness design is the effect of joint, corner, and midslab edge deflections. This aspect has not yet been fully explored in development of the PCP designs. Typically, the PCP projects have been constructed using very good support system as provided by stabilized bases, LCB, or an existing concrete pavement. Also, the strands are typically placed about 13 mm below mid-depth to create higher pressures at slab bottom and to minimize upward warping of the slab ends. This apparently mitigates deflection-related problems.

Joint Hardware Design Considerations

Proper attention must be given to joint hardware because a large number of items such as anchors, strands, load transfer devices, joint seals, reinforcement, and positioning bars are located within a few mm of the joint. Detailing of the joint hardware is, therefore, a critical element of PCP design. These detailing requirements also put a limit on the minimum slab thickness that can be practically used for construction. For the slab end prestressing technique, the joint design also incorporates the design of the gap slab.

The post-tensioning may be curried through the gap slabs or the gap slabs may be designed as independent slabs in which case the slabs are heavily reinforced. An example of the joint and gap slab detailing is shown in Figure 1 (Ref. 6). A plan view of the detailing is shown in Figure 2 (Ref. 6). Cross-sections illustrating typical anchoring and dowel bar details are shown in Figures 3 and 4, respectively (Ref. 6).

The joint width and the sealant have to be designed to accommodate slab end movement due to the following (Ref. 6):

1. Temperature changes (seasonal).
2. Concrete shrinkage (long-term).
3. Concrete creep (long-term).

Total computed annual changes in joint width may range from about 38 to 51 mm for 122 m slab panels. The changes in joint width measured in the field correspond closely to the computed measurements. Detailed discussion on computation of slab end movements is given in References 4 and 6. It should be noted that actual joint width set at time of construction is based on ambient temperature conditions – a smaller joint width is set during warmer days and a larger joint width is set during cooler days.

DESIGN, CONSTRUCTION, AND PERFORMANCE OF SPECIFIC U.S. PROJECTS

This section provides specific details for each of the eight U.S. PCP projects. Only unique design and construction details are presented to highlight major features of each project that re different from the other projects. For each project, the performance data and the repairs performed are also discussed. Additional details on design, construction, and performance (as of 1982) of four of the earlier highway projects are given in Ref. 7.

Dulles Airport Access Road Project (Refs. 8 and 9)

This first significant PCP experimental project was constructed during the fall of 1971 and is a part of an access road to Dulles Airport. The project design and the instrumentation and testing plans were developed by Mr. Bengt Friberg, a pioneer in PCP technology at that time. The PCP section consisted of six panels as detailed below:

Slab Designation	Slab Length, m	Prestressing Detail
A	122	Grouted tendons
B	153	Grouted tendons
C	183	Grouted tendons
D	232	Plastic encased tendons
E	153	Plastic encased tendons
F	122	Plastic encased tendons

The PCP consisted of 7.3-m wide and 152 mm thick slabs. The interface treatment consisted of 6.35-mm thick sand layer over the cement treated base and a double layer of polyethylene sheets over the sand layer. All slabs were post-tensioned at the same end of slab prestress level of 201 psi (13,166 kg strand force) irrespective of slab length. Gap slabs were 2.44 m long and 152 mm thick and incorporated two active joints formed using I-beams. The opening between adjacent I-beams was filled with foamed-in-place polyurethane. For Slabs A, B, and C, tube-encased grouted tendons were used. The tendons were 7-wire Grade 270 strands. Each strand was inserted into 19 mm, 10-gage steel tubing. Neat cement grout was inserted at points about 30.5 m apart.

The longest slab, Slab D, developed a working crack at about mid-length at about 1½ month when the ambient temperature was about –9.4°C, indicating that the 1,380 kPa end of slab prestressing was not adequate for the long slab length. During May 1972, a random longitudinal crack was observed in Slab A. Since then, additional transverse cracking developed in Slab D that has, over the years, deteriorated. These cracks, many of them wide, have exhibited severe spalling and punchout type damage. All other slabs also developed one or more very tight transverse cracks. The midslab crack at Slab C has deteriorated badly and during August 2000 developed a fault of about 51 to 76 mm along the width of the crack. This resulted due to the expansion of the slab and non-working adjacent expansion joints. The slab on one side of the crack had almost "stepped" over the slab on the other side of the crack. The grouted tendons had ruptured at the crack and indicated signs of corrosion. However, the two segments of Slab C on each side of the crack exhibited no additional distress and still appeared to be prestressed, apparently because of the use of the grouted tendons. The midslab crack at Slab B has also deteriorated and was about 51 mm wide during August 2000. However, Similar to Slab C, the individual slab segments of Slab B do not exhibit additional distress. The midslab crack in the 122 m long Slab A exhibits some light spalling, but is tight (as of August 2000), indicating continuity of the grouted tendon. There is no unusual distress in Slabs E and F.

The airport authority (as of fall 2000) is considering temporary repair alternatives to repair the most distressed areas including use of full-depth patching. It is expected that the PCP section will be reconstructed within a few years as part of a capital improvement program for the access road. Even though the project is used by light traffic, the pavement has provided almost zero-maintenance service for almost 30 years.

Harrisburg, Pennsylvania Project (Refs. 10 and 11)

This 2.5 km long project, constructed during November 1973, consists of 23 prestressed slabs, each nominally 183 m long. The actual slab lengths ranged from 145 to 183 m. The slabs are 7.3 m wide and 152 mm thick. The project also included a center lane for left turns, which was also prestressed. Gap slabs were 0.9 m long. Post-tensioning was extended into the gap slab. Terminal joints, incorporating a sleeper slab, were used at each slab end and at approaches to a structure. During construction, a tendon had to be spliced in one slab and two failures occurred at the jacking bridge during initial stressing. This project used a customized steel tongue and groove assembly that facilitated the post-tensioning of the gap slab.

Transverse cracking developed in some of the slabs during early age. These cracks were reported to be tight after about seven years of service. Several longitudinal cracks also developed, apparently during the harsh winters of 1976-1977 and 1977-1978 as a result of excessive frost heave under the pavement. These cracks were repaired during the fall of 1978.

Joint movement was measured to be about 6.35 mm for a temperature change of –4°C. The project has generally performed well and exhibited good ride quality. During December 1975, two of the transverse joints were repaired because of the damage resulting from the locking up of the tongue and groove at these locations. Similar distress also developed a few other joints and additional repairs have been performed at joints over the years.

The project has been in service for over 27 years and is beginning to become a maintenance concern. It is expected that this project will be rehabilitated in the next few years as part of the upgrading of the roadway.

Mississippi Project (Ref. 12)

This 4-km (both directions) project was constructed during 1977 along a 4-lane section of US 84 at Brookhaven, Mississippi. The project consists of 58 slabs, 137 m long, 7.3 m wide and 152 mm thick. Steel bullheads were used at the end of the prestressed slabs. Gap slabs were 2.44 m long and incorporated two active expansion joints. Styrofoam was used at the expansion joints and polysulphide joint filler was used to seal the joints. The project had a road crossing within the prestressed pavement construction and traffic flow was maintained by constructing one-half of the slab length of the prestressed pavement at a time. A keyed construction joint was built and the first half-slab cast was stressed from one end only. Later the tendons were extended through the other half and the second half-slab was cast. The construction joint anchors at the first half slab were loosened and removed and the full slab prestressed.

The project has performed reasonably well. A few transverse cracks did develop soon after concrete placement and closed up after final prestressing except for one slab placed with only one layer of polyethylene sheet. Also, a longitudinal crack developed in 15 slabs as a result of problems with the polystrip inset used to form longitudinal joints. Over the years, the joint filler material has been replaced at most joints. Seasonal joint width changes were reported to be about 31.75 mm.

Minor spalling developed at many joints. Before 1990, the spalls were repaired using rapid setting concrete. Since 1990, the spalls have been repaired using asphalt concrete. During the summer of 2000, two full width asphalt patches were placed at the west end of the project. As of the summer of 2000, only 2 of the 118 transverse joints have required major repair and about 15 joints have required minor spall repair. The pavement is becoming a maintenance concern and is expected to be rehabilitated soon.

Arizona Superstition Freeway Project (Ref. 13)

This 1.9 km long project was constructed during March and Airport 1977 along an experimental section of the Superstition Freeway (State route 360) in Tempe, Arizona. The project consists of 30 prestressed slabs, 9.6 m wide, 152 mm thick, and nominally 1,22 m long. The pavement width incorporated two 3.66-m lanes and a 2.3-m outside shoulder. Gap slabs were 2.44-m long, 254 mm thick, and were conventionally reinforced. Gap slabs were installed during mid-May 1977. The joint was designed to accommodate maximum joint opening of 51 mm and a minimum joint opening of 13 mm.

Design traffic was estimated at about 26,000 ADT (191 million vehicles over 20 years) with 1% truck traffic. By 1986, the traffic count was 98,000 ADT with about 3 to 4% truck traffic. It was estimated that the pavement had already carried the 20-year design traffic within 10 years of operation.

Fine transverse cracking was noted near midslab soon after concrete placement. Most of these cracks closed up after the application of the final prestressing. Distress surveys were conducted after about 9 years (Ref. 14) and 11 years (Ref. 15) and the results are discussed next.

Joint repairs were required at several locations. Joint spalling was a major problem, apparently resulting from poor concrete consolidation at some of these joints. Also, the neoprene strip seals were difficult to retain in place. Many of the joints were filled with sand, gravel, and other debris. A section of a prestressed slab was removed full width for a length of 4.88 m and replaced. The continuity of the prestressing steel was maintained for this repair. The project also exhibited substantial amount of longitudinal cracking that appears to have developed over the prestressing strands. Some of these cracks were 30.5 m or longer.

Several prestressed slabs and gap slabs had experienced corner breaks, possibly due to loss of support and restraint provided by misaligned load transfer devices. More problems were observed along the eastbound section of the project which was placed first.

Deflection testing conducted during the spring of 1988 indicated low LTE at joints (40 to 68%). Deflection testing also indicated a significant amount of loss of support beneath the slab corners.

As of 1988, the pavement exhibited rough ride as a result of undulations left in place during the stop and go paving operations and as a result of patching at gap slabs and at joints.

The PCP section was removed during 1997 as a result of the realignment of a nearby intersection.

Texas Project (Refs. 16 and 17)

This project, constructed during 1985, is located along a section of southbound I-35, 24 km north of Waco in McClennan County. The section is one mile long and contains a total of 32 prestressed slabs. The slabs are 152 mm thick and were placed over an existing 279-mm thick jointed concrete pavement with an intermediate 76-mm asphalt concrete stress-reducing layer. The pavement is 12 m wide and consists of two 3.66-m lanes, a 3.05-m outside shoulder, and a 1.22-m inside shoulder, and has the following slab panels:

- 9 slabs at 73.2 m by 6.4 m.
- 7 slabs at 134.2 m by 6.4 m.
- 9 slabs at 73.2 m by 5.2 m.
- 7 slabs at 134.2 m by 5.2 m.

The prestressing was applied using the midslab prestressing technique. As a result, no gap slabs were used. The midslab prestressing was applied at post-tensioning pockets used at midslab locations using a custom-designed coupler. Prestressing tendons were also looped in the transverse direction to provide transverse prestressing. A plan view showing the typical prestressing tendon details is given in Figure 5 and the midslab stressing pocket details are shown in Figure 6.

For this project only a single layer of polyethylene was used over the asphalt layer. Concrete was mostly placed using slipform along the outside edge and a side form along the interior edge for the 5.2-m wide paved lane. For the 6.4-m wide lane placement, the edge of the 5.2-m wide lane served as a side form and the other edge was slip formed. Details of the specific prestressing operations used are given in Refs. 16 and 17. The midslab stressing pockets were filled in with concrete after the completion of the prestressing operation. All expansion joints were set closed at time of construction and were designed to accommodate joint opening of 89 mm.

This project was instrumented and monitored during early age and also during the July 1988 to February 1989 period (Ref. 18). Several of the 73.2-m long panel joints were observed to be completely closed during the hot weather. Measurements indicate that the slab expansion and contraction is taking place over the full length of the slabs. Maximum and minimum measured joint widths were 35.6 mm and 6.6 mm for the 73.2-m slabs and 81.3 mm and 24.9 mm for the 134.2-m slabs. The project is reportedly performing well.

I-99, Blair County, Pennsylvania Project (Ref. 19)

The 3.22-km section of PCP was constructed during fall and winter of 1988 along the 2-lane wide northbound lanes of I-99 (also U.S. 220). The section consists of 60 slab panels, 122 m long, 7.32 m wide, and 178 mm thick. Gap slabs that were 1.22 m long were used and were post-tensioned as part of the main slabs. Also, 3.05 m wide tied shoulders were also used along the outside traffic lane and 1.22 m tied shoulders were used along the inside traffic lane. The shoulders were 178 mm thick and had joint spacing of 6.1 m. Expansion joints were provided in the shoulders to match the traffic lane expansion joints. The shoulders were placed directly over the lean concrete base. Two applications of white pigmented wax based curing compound were used over the LCB to reduce slab to base friction.

The traffic lanes were constructed during November 1988 under cool temperature conditions. Gap slabs were placed during January 1989 and the tied shoulders were placed during July 1989. Two slab panels were instrumented to obtain information relative to short term and long term slab movements and concrete strains. In addition, load testing of the pavement was also carried out. Details related to the instrumentation and testing are given in Reference 19.

The project was constructed under difficult weather conditions – ambient temperatures ranging from 1.7 to 4.4°C during concrete placement. The midslab prestress at the end of final prestressing was measured to be about 0.7 MPa. Daily joint width changes were measured to be about 8 and 13 mm during the summer (August 1989) and winter (March 1999), respectively. Overall, average joint width was 44 and 73 mm for the summer and winter periods, indicating a seasonal joint width changes of about 38 mm. Falling weight deflectometer (FWD) testing was conducted during September 1989. Measured load transfer effectiveness at joints averaged 77% and ranged from 59% to 94%.

Several hairline transverse cracks were noted in some of the panels during August 1989. Cracking was generally within 6.1 m of the midslab location. A follow-up survey in March 1990

(second winter) showed a significant amount of additional cracking. The excessive amount of cracking in some of the slab panels is attributed to less than effective prestressing (or loss of prestress) and use of tied concrete shoulders. The cracking in many panels matched the shoulder joints. It appears that the tied shoulders provided significant restraint to the prestressed slab panel movements. The prestressed slabs expand and contract over their full length. However, the jointed slab panels expand and contract only within their own 6.1-m length. The differential movement problem was clearly observed at the expansion joints – the prestressed slab joints were up to 25.4 mm away from the adjacent shoulder joint. Even with the significant amount cracking, the PCP section is providing a good ride. No major repairs have been undertaken to management transverse cracking.

O'Hare International Airport, Illinois Project (Ref. 20)

In 1980, two segments of post-tensioned pavements were placed, as overlays, on an existing CRC concrete pavement, on the east end of Runway 27L at Chicago's O'Hare Airport. Each post-tensioned segment was 122 m long and 46 m wide. The segments were post-tensioned in both the longitudinal and transverse directions. Sliding plate joints were placed between the two post-tensioned segments and between the post-tensioned segment and the transition pavement which abutted one end of the post-tensioned pavement.

The post-tensioned slabs were cast as 7.6 m wide by 122 m long using a conventional paver with fixed forms. The individual lanes were post-tensioned in the longitudinal direction as soon as the concrete reached prescribed strengths. When all six lanes were cast and fully post-tensioned in the longitudinal direction, transverse post-tensioning was added across all six lanes.

A leveling course of sand asphalt approximately 51 mm thick was placed over the existing CRC pavement. A double layer of polyethylene was placed between the leveling course and the post-tensioned slab to reduce the friction between the layers. The post-tensioned slab on the extreme end was cast 229 mm thick whereas the adjoining section was cast 203 mm thick. Post-tensioned slabs of two thicknesses were used to determine if the slab thickness would have an effect on performance.

Concrete used in the post-tensioned slabs met the FAA 501 specifications except that a 28-day compressive strength of 34,500 kPa was called for. Because it was not possible to use internal vibrators, the concrete was transported to the site at a slump of approximately 51 mm and a water reducing agent added at the site to bring the slump to approximately 127 mm just before placing in the forms.

The post-tensioning system used was the DYWDAG thread bar system. The post-tensioning tendons were placed inside a metal sheathing, and after all post-tensioning was complete, the sheathing was pressure filled with a non-shrink grout. DYWDAG thread-bar post-tensioning tendons 25.4 mm in diameter were placed at 457 mm centers in the longitudinal direction and 22 mm diameter tendons placed at 610 mm centers in the transverse direction. Post-tensioning was applied in three stages in the longitudinal as the concrete reached prescribed strengths. Full post-tensioning was applied to the transverse tendons after all lanes had been cast. The transverse tendons were placed on chairs at an elevation of 13 mm below the pavement neutral axis, and the longitudinal tendons rested directly on the transverse tendons.

After more than 20 years of service, under perhaps the most stringent service conditions in the world, (50,000 to 60,000 departures annually over the entire life of the pavement) the post-tensioned pavements are still providing outstanding service. Except for a problem where snowplows damaged the sliding plate joints, there has been no maintenance activity or repairs made on the post-tensioned slabs. A recent check (January 2001) with pavement managers for the O'Hare Airport indicated there are no cracks or other types of distress in either of the post-tensioned slabs.

Greater Rockford Airport, Illinois Project (Ref. 21)

The post-tensioned pavement section at the Greater Rockford Airport was constructed in 1993 and has been in service for over 7 years. The post-tensioned segment is 366 m long by 23 m wide and is a part of the primary taxiway serving the UPS air to ground terminal at the airport. Because of service to the UPS terminal, the pavement receives a number of heavy aircraft daily.

The post-tensioned slab was cast using fibrous concrete with a 28-day flexural strength of 6,900 kPa. Each cubic year of concrete contained approximately 36.32 kg of crimped steel fibers manufactured by Novocon International. There were no joints in either the longitudinal of transverse direction of the 366 m by 23 m post-tensioned section. The concrete was placed in a single paving lane 23 m wide using a bridge paver. Slab thickness and concrete flexural strength requirements were controlled by the maximum stress produced in the transverse direction by slab curl and the design aircraft. Stresses in the longitudinal direction were compensated for by the longitudinal post-tensioning.

The post-tensioned slab consists of a 178 mm thick post-tensioned slab placed on 152 mm of econocrete subbase with 152 mm of granular subbase under the econocrete. A double layer of polyethylene sheeting was placed between the post-tensioned slab and the econocrete subbase to reduce friction between the post-tensioned slab and the subbase.

The pavement was post-tensioned in the longitudinal direction only. Post-tensioning was provided by 15 mm diameter, seven-strand wire cable encased in a plastic sheathing. The strands were placed 13 mm below the neutral axis of the slab and were spaced at 305 mm intervals in the transverse direction. The wire strands had an ultimate capacity of 18,630 kPa. Each tendon had an ultimate capacity of 26,604 kg and was stressed to 80% of ultimate capacity, or to 21,293 kg during the post-tensioning process. This provided a mean initial prestress of 3,850 kPa in the concrete at the slab ends. The eccentricity caused by the strand being placed below the neutral axis of the slab produced a maximum initial stress of 5,499 kPa at the bottom, and a minimum prestress of 1,649 kPa at the top of the slab. Post-tensioning was done in three phases starting at approximately 12 hours after casting, as the concrete reached prescribed strengths.

From the completion of construction in 1993 through 1998, the pavement was closely monitored four times a year for behavior and performance. A few longitudinal hairline cracks appeared shortly after construction, but these did not propagate or expand during the five years while the pavement was being monitored. At last report, (in 2000), the pavement is performing as designed with no significant distress and has required no maintenance.

SUMMARY

The review of the overall performance of the eight PCP projects indicate that properly designed and constructed PCP can provide almost no-maintenance service life of 20 or more years. The primary concern with the PCP projects reported here have been joint related problems. Even though PCP have significantly fewer joints, any joint repair requiring corrective work to the joint hardware results in a major repair effort. The experiences to date also indicate that PCP can be designed to incorporate substantially thinner slabs and that normal construction procedures can be used. Construction problems, if encountered related to the prestressing can be adequately corrected.

A wide range of slab lengths were used in the experimental PCP projects. Slab lengths of 92 to 183 m appear to be performing well, provided proper prestressing levels are used for the longer slabs. However, it is recommended that shorter slab lengths be used until better joint hardware is developed. Other specific observations are as follows:

1. Concrete shoulders, if used, should be constructed monolithically with the traffic lanes and prestressed.
2. Computed long-term minimum midslab prestress levels should be at least 345 kPa and preferably about 690 kPa.
3. Joint hardware design need to be simplified.
4. Prestressed concrete pavements can be repaired without much difficulty – from tendon replacement to joint hardware replacement.

Currently, the status of PCP is in limbo in the U.S. and in other countries. Although, it has appeared that PCP technology is a very promising technology to provide long-term low-maintenance pavements at a competitive life cycle cost, there has been a reluctance in embracing this technology for production paving. It is hoped that the successful performance of several of the reported projects and lessons learned from the not-so-successful projects will lead to continued improvement in PCP technology that may result in an ideal low-maintenance pavement.

ACKNOWLEDGEMENT

The authors wish to thank all involved highway and airport agencies for providing data on performance of the experimental PCP projects reported in this paper. The views and opinions expressed in this paper are those of the authors and not those of the agencies that the authors represent

REFERENCES

1. Hanna, A.H., et al., *Technological Review of Prestressed Pavements*, Report No. FHWA-RD-77-8, Federal Highway Administration, Washington, DC, December 1976.
2. Friberg, Bengt F., Investigations of Prestressed Concrete for Pavements, *Bulletin* No. 332, Highway Research Board, 1962, pp. 40-94

3. ACI Committee 325, Subcommittee VI, Proposed Design of Experimental Prestressed Pavement Slab, ACI Journal *Proceedings*, V. 65, No. 4, April 1968, pp 249-265.
4. ACI Committee 325, *Recommendations for Designing Prestressed Concrete Pavements*, ACI Document 325.7R-88, American Concrete Institute, Detroit, Michigan, 1988.
5. Tayabji, S.D., B.E. Colley, and P.J. Nussbaum, *Prestressed Pavement Thickness Design*, Report No. FHWA/RD-82/091, Federal Highway Administration, Wash., DC, Jun 1983.
6. Nussbaum, P.J., S.D. Tayabji, and A.T. Ciolko, *Prestressed Pavement Joint De*signs, Report No. FHWA/RD-82-090, Federal Highway Administration, Washington, DC, June 1983.
7. Gramling, W.L., T.P. Teng, G.R. Morris, J. Sheffield, *Prestressed Pavement Performance in Four States, A Panel Report*, Report No. FHWA/RD-82/169, Federal Highway Administration, Washington, DC, September 1983.
8. Friberg, B.F., and T.J. Pasko, Prestressed Concrete Highway Pavement at Dulles International Airport, *Highway Research Record* No. 466, Highway Research Board, 1973.
9. Friberg, B.F, and T.J. Pasko, *Prestressed Concrete Highway Pavement at Dulles International Airport, Research in Progress Report to 100 Days*, Report No. FHWA-RD-72-29, Federal Highway Administration, Washington, DC, August 1973.
10. Brunner, Raymond, Prestressed Pavement Demonstration Project, *Transportation Research Record* No. 535, Transportation Research Board, Washington, DC, 1975.
11. Brunner, R.J., *Prestressed Pavement Demonstration Project – Investigation and Repair of Longitudinal Pavement Cracking*, Research Project 72-22(2), Pennsylvania DOT, Apr 1979.
12. Albritton, G.E., *Prestressed Concrete Highway Pavement: Construction – As Built Performance*, Report No. RD-65-1, Mississippi State Highway Department, August 1978.
13. Morris, G.R. and H.G. Emory, *The Design and Construction of Arizona's Prestressed Concrete Pavement*, Report No. DOT-FH-15-174, Arizona DOT, October 1977.
14. Powers, R.L., and J.P. Zaniewski, *Nine-Year Performance Evaluation of Arizona's Prestressed Concrete Pavement*, paper presented at the annual meeting of the Transportation Research Board, Washington, DC, January 1987.
15. Peshkin, D.G., et al., *An Eleven-Year Evaluation of Arizona's Prestressed Pavement*, Proceedings of the 4th International Conference on Concrete Pavement Design and Rehabilitation, Purdue University, April 1989.
16. Maffei, J.R., N.H. Burns, and B.F. McCullough, *Instrumentation and Behavior of Prestressed Concrete Pavements*, Research Report 401-4, Center for Transportation Research, University of Texas, Austin, TX, November 1986.
17. Mendoza Diaz, A., et al., *Design of the Texas Prestressed Concrete Pavement Overlays in Cooke and McLennan Counties and Construction of the McLennan County Project*, Research Report 55/556-1, Center for Transportation Research, University of Texas, Austin, TX.
18. Mandel, E.D., N.H. Burns, and B.F. McCullough, Prestressed Concrete Pavement: Instrumentation, Behavior, and Analysis of Horizontal Movements, paper presented at the annual meeting of the Transportation Research Board, Washington, DC, January 1990.
19. Okamoto, P.A. and S.D. Tayabji, Instrumentation and Evaluation of a Prestressed Pavement Section in Pennsylvania, Transportation Research Record No. 1505, Transportation Research Board, 1995.
20. Barenberg, E.J., Private Communication, January 2001.
21. Crawford, Murphy & Tilly, Inc., Constructability Report: Prestressed, Fibrous Concrete Pavement, Greater Rockford Airport, Illinois, report prepared for the Omaha District, U.S. Army Corps of Engineers (Contract No. DACA 45-91-D-0007), May 1995.

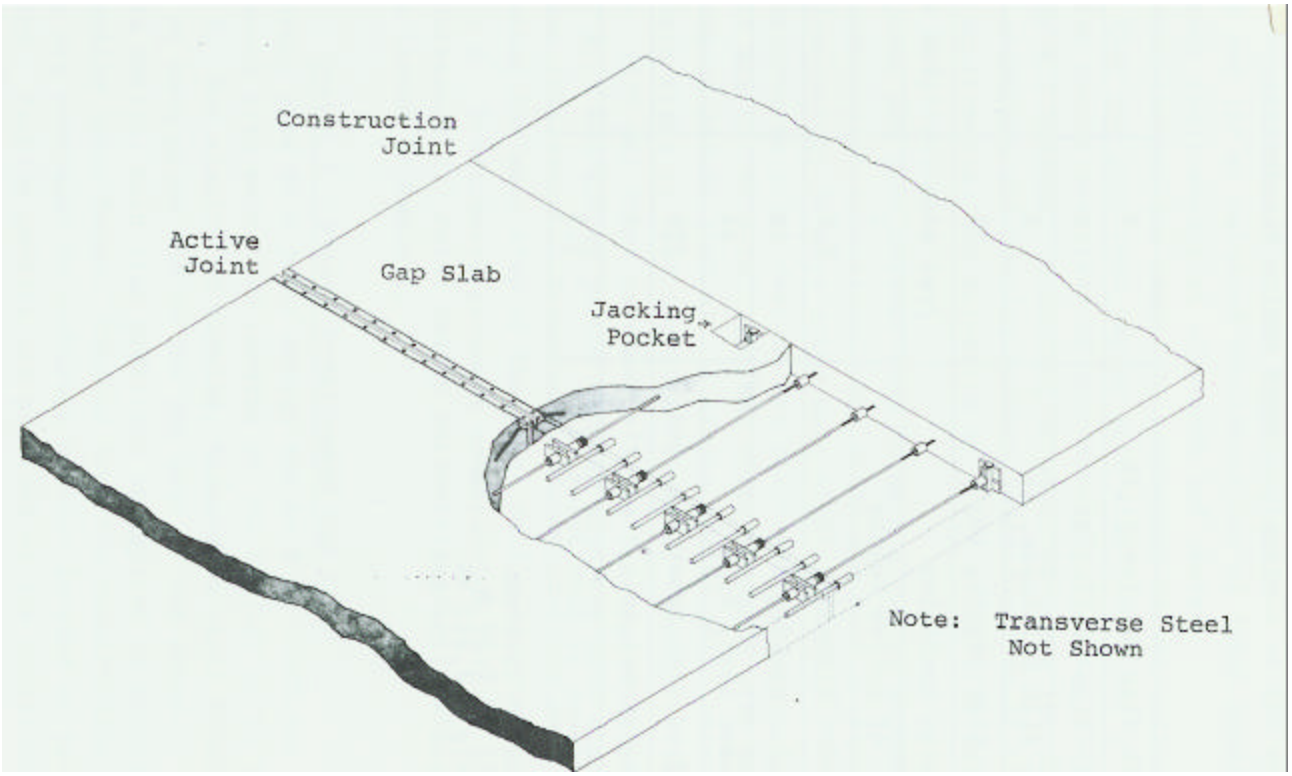

Figure 1 – Typical Gap Slab Details

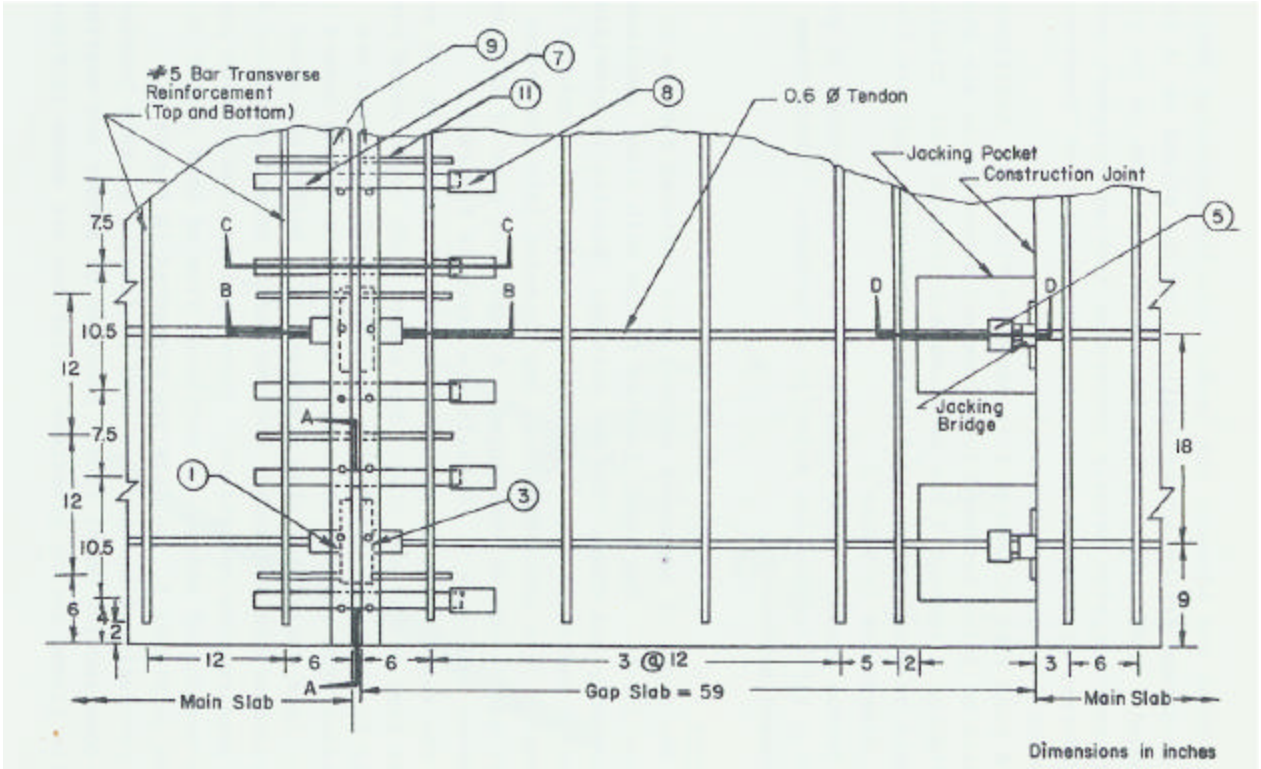

Figure 2 – Typical Joint Hardware Detailing

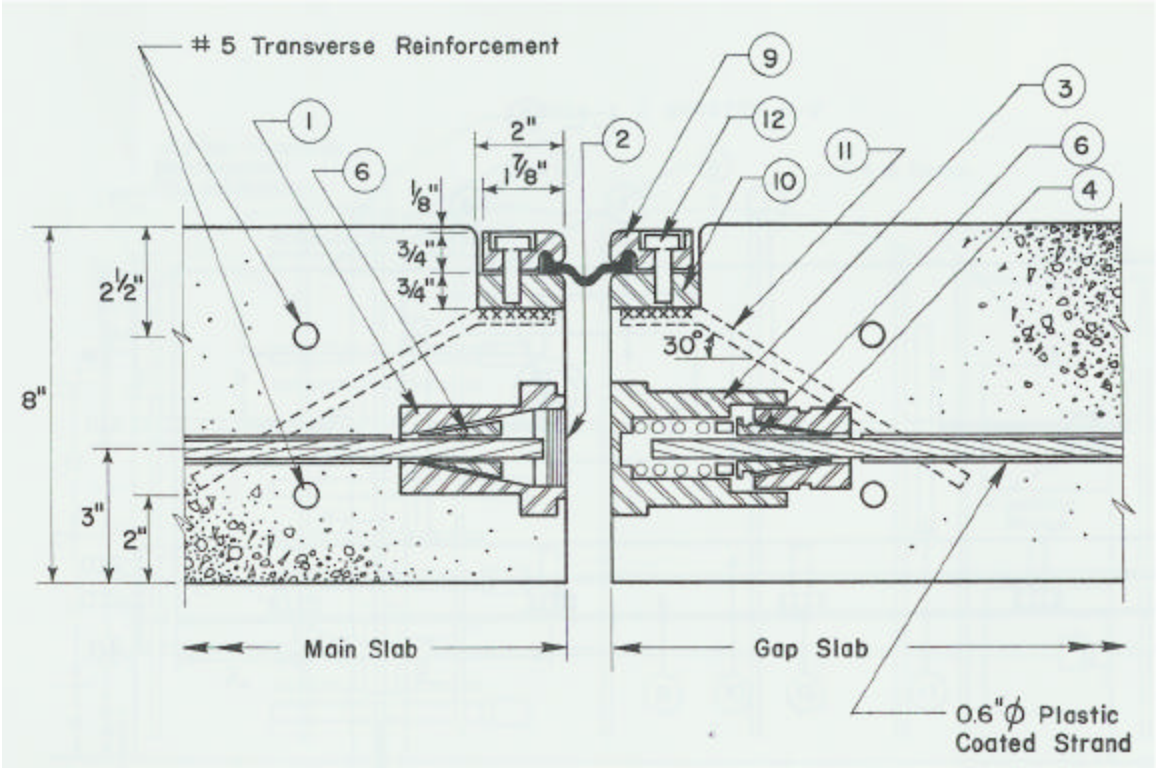

Figure 3 – Typical Anchor Detail

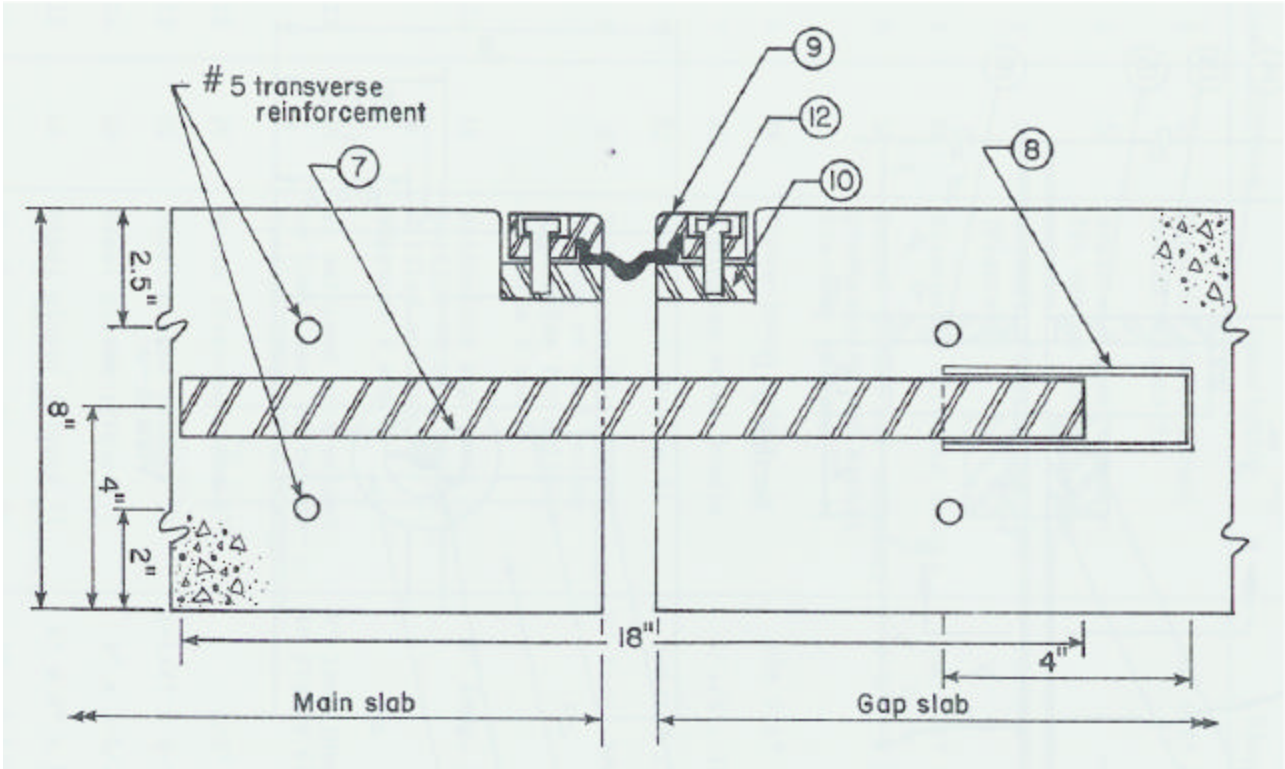

Figure 4 – Typical Load Transfer Detail

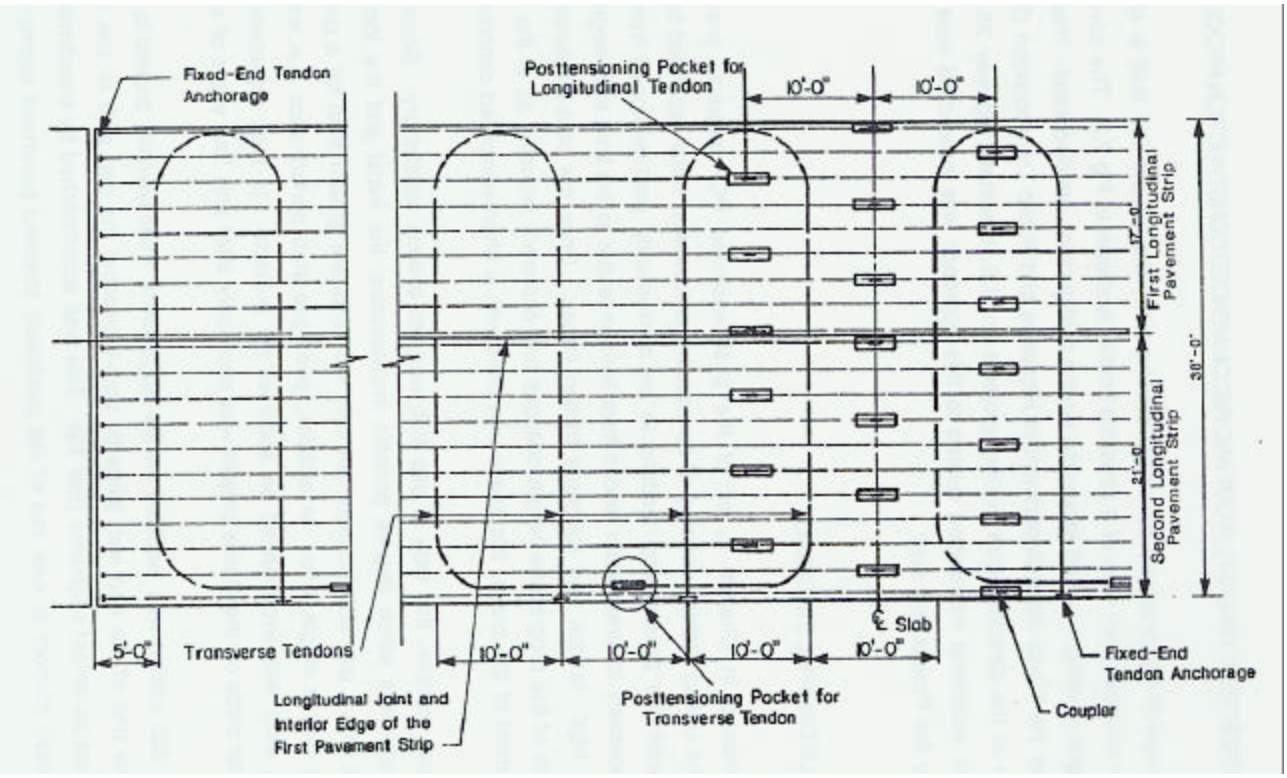

Figure 5 – Texas PCP Prestressing Details

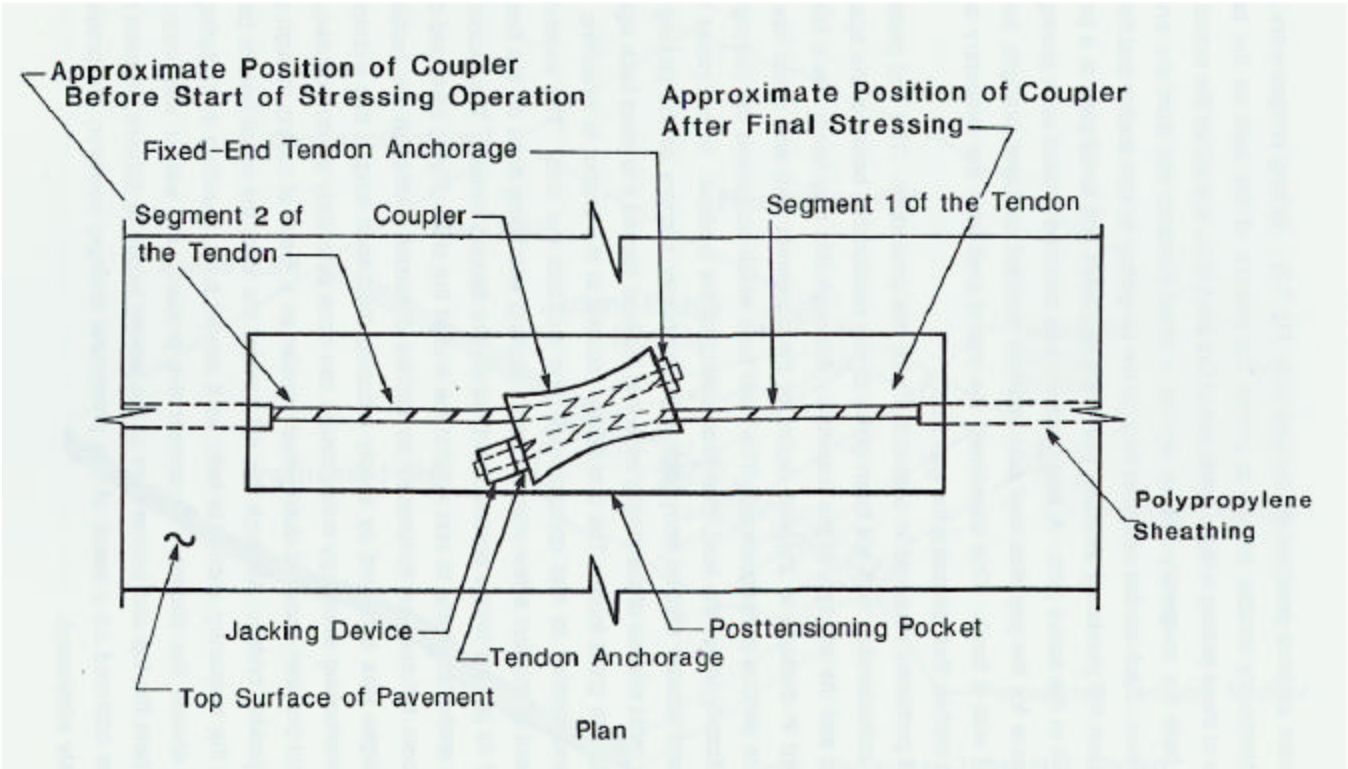

Figure 6 – Texas PCP Midslab Stressing Pocket and Coupler Details