Feasibility Study for the Use of Precast Portland Cement Concrete Panels for Rehabilitation of Airfield Pavements

By

Richard H. Speir, P.E.
LAW PCS
12104 Indian Creek Court, Suite A
Beltsville, MD 20705
Phone: 301-210-5105 Fax: 301-210-5032
email: rhspeir@kennesaw.lawco.com

Shiraz D. Tayabji, Ph.D., P.E.
Construction Technology Laboratories, Inc.
5565 Sterrett Place, Suite 312
Columbia, Maryland 21044
Phone: (410) 997-0400; Fax: (410) 997-8480
Email: stayabji@ctlgroup.com

Gonzalo R. Rada, Ph.D., P.E.
LAW PCS
12104 Indian Creek Court, Suite A
Beltsville, MD 20705
Phone: 301-210-5105 Fax: 301-210-5032

Yue Sun Chen
And
Scott Murrell
Port Authority of New York and New Jersey
New York, New York

ABSTRACT

The use of conventional practices for long-term rehabilitation of existing asphalt or concrete pavements on active airfield surfaces is not always practical given the short timeframe available for construction and the need for high early strength to allow for immediate use by aircraft traffic. This study, sponsored by The Port Authority of New York and New Jersey (PANY/NJ), investigated the use of precast portland cement concrete (PCC) panels as a cost effective alternative for rehabilitation and possible new construction of these critical facilities. PANY/NJ operates Kennedy International, Newark International, LaGuardia and Teterboro airports.

From an historical perspective, research and application of this procedure in practical situations are limited. It was therefore necessary to conduct a feasibility study to assess if the engineering, construction, and performance requirements for the use of precast PCC panels could be met by currently available technology. The first step in the process was a review of the state of the practice to determine the extent to which the process was feasible. Based on the review and

discussions between the project team and PANY/NJ staff, two alternative schemes were selected for detailed evaluation.

The first scheme involved use of slabs designed using a conventional design approach. In this method, use of plain jointed panels, 3.8 by 3.8 m to 7.6 by 7.6 m, and thickness ranging from 30.5 to 40.6 cm. was investigated for airfield applications. The second scheme involved use of post-tensioning to tie together multiple slab panels, to provide an effective slab size of about 7.6 m by 7.6 m. Post-tensioning of the slab panels allows use of thinner slabs. In evaluating these two schemes, the following critical limiting factors were considered to determine their feasibility:

1. Aircraft loading
2. Panel dimensions (transporting, site assembly, and placement considerations)
3. Existing pavement removal and site preparation
4. Use of interface treatment (sand bedding, stone dust, grout)
5. Load transfer at joints
6. Construction sequencing, including installation of light system
7. Allowable panel geometric tolerances and final surface grade tolerances

This paper presents the results of the feasibility study and provides the preliminary design details for the two schemes selected for applications at PANY/NJ airfields. A trial installation is planned at New York's La Guardia Airport during the fall 2001.

INTRODUCTION

"Invisible construction" is the latest catch phrase in the industry to describe infrastructure rehabilitation projects that have little or no effect on users. This is accomplished through nighttime/weekend work hours, detours, and innovative construction techniques. One common invisible construction technique is to use precast concrete panels to replace bridge decks. A logical extension of this technique is to use precast concrete panels to rehabilitate pavements.

Invisible construction is usually used for highway or bridge rehabilitation. Airports can also benefit from invisible construction. As airports become more congested, pavements must be rehabilitated or expanded with minimal impact on aircraft operations. This is especially true for busy airports such as La Guardia Airport (LGA). To date, the preferred invisible construction technique used by The Port Authority of New York and New Jersey at LGA has been asphalt concrete paving during nights and weekends. The rationale is that asphalt concrete pavement can be constructed during shorter work periods than cast-in-place PCC pavement. However, asphalt concrete pavement requires more frequent rehabilitation than PCC. A few areas, where extended closures were available, were paved with PCC with excellent results. As a result, the PANY/NJ prefers to use concrete pavement when the required site access is available.

At LGA, during the spring of 2000, the West End of Taxiway 'B', leading to the end of Runway 13, was rehabilitated. The taxiway had rutted due to plastic flow of the asphalt concrete in layers as deep as 45.7 cm inches below the surface. During design development, PCC pavement was investigated, as a logical substitute for asphalt concrete since deep removal of asphalt concrete

was required. Although preferred, conventional PCC pavement could not be considered because of the allowable work period. The excessive time required to set forms, install dowels, and place, finish, and cure concrete (even fast setting) did not make the conventional PCC pavement alternative feasible. Therefore, the asphalt concrete alternative was constructed. However, because the Port Authority desired a long-term solution for rapid turn-around pavement construction and rehabilitation techniques, the agency identified precast concrete paving as a possible solution.

Port Authority engineers have been following the development of precast concrete pavement for a number of years. After the LGA Taxiway 'B' project, they decided to investigate the use of precast concrete paving for use at LGA. This paper presents the results of a study that was initiated to investigate the feasibility of using precast PCC for rapid turn-around airport taxiway pavements managed by the Port Authority. A study team was formed that included Port Authority design and construction staff and LAW PCS and CTL. The scope of the feasibility study included the following items:

- Literature search
- Design computations
- Meetings/Discussions with precast suppliers
- Constructability review
- Cost estimates
- Field trial installation

LITERATURE REVIEW

This section provides a summary of the information collected as part of the literature review/search phase of the feasibility investigation. Our approach in this area was to look at the current state of practice related to precast paving. This effort has involved a review of reports of projects constructed primarily in the United States. Appendix A lists some of the references that were reviewed to collect background information for this study.

As part of the investigation, a number of precast panel projects constructed in the United States over the last 30 to 40 years were identified. Some of the significant projects are listed below:

1960's – South Dakota DOT; t = 11.4 cm, 1.8 m by 7.3 m
1971 – Michigan DOT; t = 20.3 – 22.9 cm, 3.7 m by 1.8 to 3.7 m
1972 – Florida DOT; t = 20.3 – 25.4 cm, 3.7 m by 6.1 m
1974 – California DOT, t = 20.3 cm, 3.5 m wide by 3.7 m and 5.3 m (2 panels)
1974 – New Jersey Turnpike; t = 22.9 cm, 4.0 m by 9.1 m
1979 – University of Texas Study (for CRCP repair); t = 20.3 – 22.9 cm, 3.7 m by 6.0 m
1984 – Texas DOT (CRCP repair demo); t = 20.3 cm, 1.8 m by 1.8 m and 3.7 m by 3.7 m
1991 – US Army COE, waffle slab panels; 13.7 cm and 6.9 cm thick, 2.7 m by 30 cm
1990's – Charleston Airport, SC; t = 61 cm, 3.8 m by 3.8 m (temporary use only)
2000 – Lambert Field, St. Louis, MO; t = 25.4 cm, 7.6 m by 7.6 m (single panel demonstration)

The following is a discussion of details from some of the above projects.

Post-Tensioned Panel Approach

In general, this approach involves developing a system of precast slabs that are tied together at the rehabilitation location using a series of post-tensioning tendons or strands. The slabs are manufactured with the post-tensioning ducts prefabricated in place. Once the slabs are transported to the job site, they are placed so that panel alignment allows the ducts to match one another end to end. The tendons or strands are fed through the openings and secured either at each end or in the middle of the panel system. The benefits of this approach are that the number of joints can be reduced and the slab thickness can also be reduced. Post-tensioned slab lengths can vary from just a few panels to about 150 m between expansion joints (Ref. 1).
In general there are two basic approaches to this system; central stressing approach and end stressing approach. The central stressing approach utilizes a special central stressing slab to administer the post-tensioned stress to the system. The end stressing approach is used to apply the post tensioning stress at both ends of the slab system.

Both systems use stressing tendons that are approximately 1.3 cm in diameter and generally spaced 20 cm on center. The stressing tendons are threaded through the premolded ducts once the slabs are in place and properly aligned. With this configuration, a post-tensioned stress up to 1,724 kPa is applied to the ends of the slab system (Ref. 1). For this particular configuration, panel alignment is important to ensure that post-tensioning ducts line up once the panels are in place.

Because the post-tensioned stress is critical to the success of this system, experience has shown that it is important to prepare a smooth and near frictionless plane below the slab system. This is usually accomplished by placing a thin, 2.5 to 3.8 cm, asphalt layer immediately below the post-tensioned slabs. In addition, a polyethylene sheet placed on top of the asphalt layer will provide the needed frictionless surface. This creates a condition that maximizes the amount of post-tensioned stress applied to the slab system and minimizes reduction in stress due to friction losses caused by the slab drag.

The central prestressing approach was developed by Merrit et al at the Center for Transportation Research (CTR) at the University of Texas, Austin (Ref. 2). This approach involves use of a series of panels strung together and consisting of a central stressing panel, a series of base panels of varying number, and two joint (end) panels. This particular system is a slight modification to a system proposed by McCullough et al 1985 (Ref. 3).

Figure 1 shows a cross-section view of the central panel stressing system.

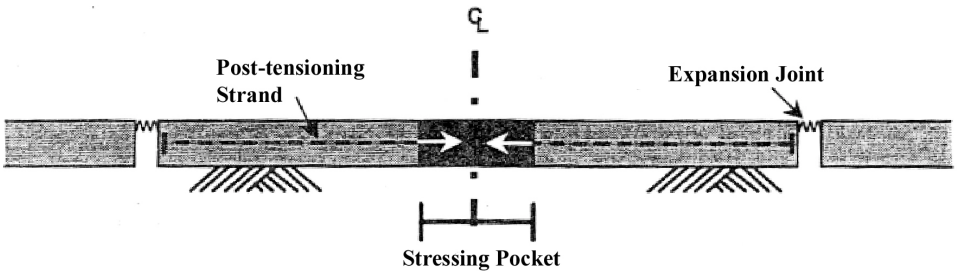

Figure 1 – Concept of central stressing (Ref. 1)

Although not pictured here, end-stressing systems require additional space on either end of the panel system to make room for the post-tensioning equipment.

Although the post-tensioning system minimizes the need for joints, it does not completely eliminate them. Figure 2 is a typical example of a load transfer mechanism utilized for prestressed pavements that can also be readily applied to precast paving that incorporate a large number of tied panels. This joint system would be applicable in either the central or the end stressing system approach.

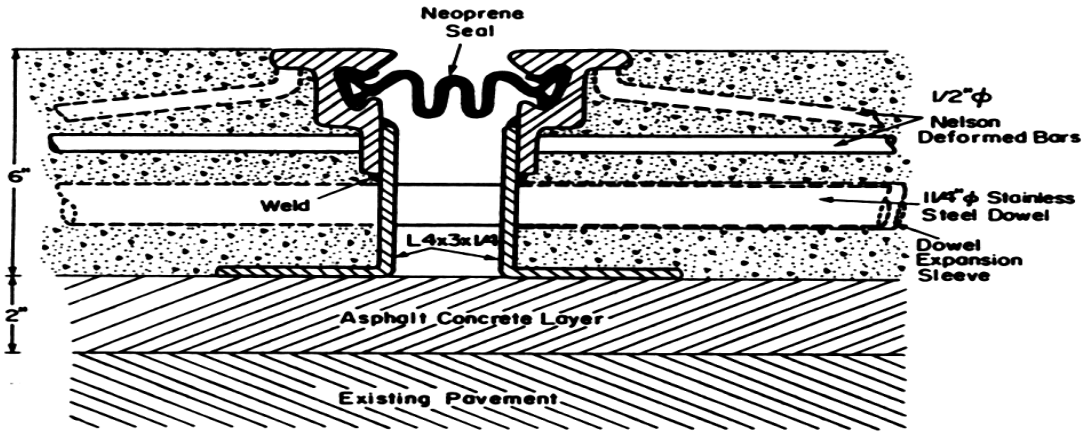

Figure 2 – Expansion joint detail for prestressed panels (Ref. 3)

In the central stressing system, the strands would be threaded through the duct and then anchored prior to applying the tensioning at the central point. In the end stressing system, the strands would extend beyond the edge of the slab so that a stressing device could be utilized. The end stressing approach could employ stressing at just one end or at both ends.

Conventional Design Approach

A second approach to precast paving involves use of a more conventional slab system. In this approach, slabs are generally designed using conventional pavement design procedures. This procedure includes panels that range in thickness from 30.5 cm to 50.8 cm depending upon design variables similar to a standard concrete pavement design. Although these variables are fairly standard, the item that requires the most attention is the joint detailing.

For the purpose of thickness design, the conventional design procedures can be used. The conventional slabs are usually designed with some level of steel reinforcement or with some prestressing to strengthen the slab for transport and handling. When utilizing this approach, it is possible to count the prestressing as a mechanism to reduce the slab thickness. However, care should be taken, when reducing slab thickness as it may have an adverse effect on slab edge stresses and joint and corner deflections.

As previously discussed, one of the most difficult issues to resolve in this approach is the design of the joints. The following series of figures are examples of joint tie-ins and joint load transfer devices used on past projects.

Figure 3 is an example of a series of joint details experimented with in a Japanese project (Ref. 4). In this project, pavements ranged in thickness from 17.0 cm to 20.0 cm. Slab dimensions ranged from 1.3 m to 2.0 m wide and 4 to 10 m long. Slabs were prestressed in longitudinal direction and reinforced in transverse direction. Two types of dowel bars were used for load transfer in this project. Figure 3A is an example of straight bars that were slid into position after the adjoining slabs were set in place. Then, dowels were grouted to keep them in position. Figure 3B shows a curved bar approach. After slabs were placed, horn-shaped bars were inserted into slots, and mortar was used to seal the opening.

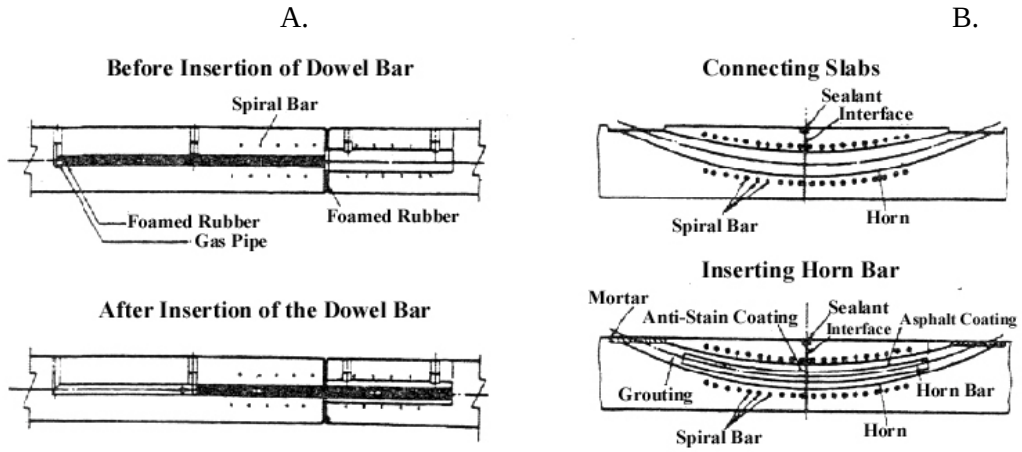

Figure 3 – Joint details for precast panels used in a Japanese project (Ref. 4)

Figure 4 represents a joint detail used in a South Dakota precast paving study. Slabs are placed side by side with protruding rebar. The rebars from adjoining slabs are welded, and the rebar cavity is filled with high strength grout. Sides are inclined to help with mechanical interlock. This approach poses some difficulties as eccentricity of this joint can cause distortion when loaded and can split the concrete cover. In addition, field welded approaches require additional time during construction and may limit productivity.

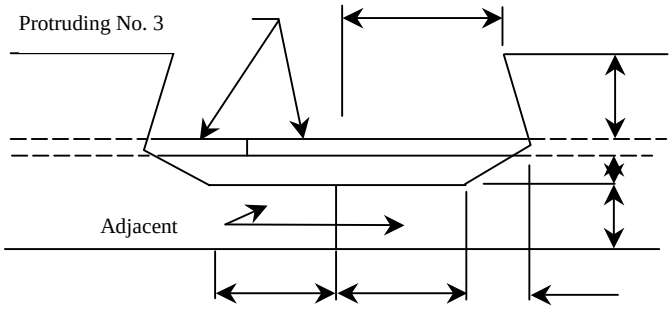

Figure 4 – Welded joint detail for connecting conventional precast panels (Ref. 5)

Figure 5 shows another group of optional joint load transfer designs. Figure 5a uses a thin plate inserted from the side after slabs are placed. Grout is injected under pressure to force the plate into contact with slabs. Figure 5b illustrates a method that involves inserting rebar on an incline as shown and grouting the holes after slabs are placed. This method does not allow for temperature movement. Finally, Figure 5c is a method that requires time consuming excavation and subgrade preparation to place the sleeper slab at each precast joint.

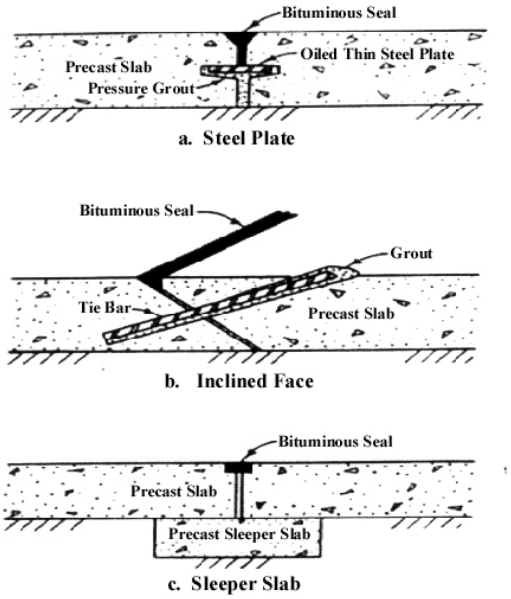

Figure 5 – Series of conventional precast pavements load transfer joints (Ref. 5)

Figure 6 shows another proposed joint detail (Ref. 1). In this detail, rebars extend out of each panel and are connected as shown once the slabs are in place. The void is then filled with concrete to make a rigid connection. Once again, this is a potentially time consuming process during construction and may limit the amount of area that can be accomplished within limited construction windows.

Figure 7 shows use of preformed recesses at one end of the slab. Then, dowels are greased and inserted in adjacent slab prior to lowering that slab into place with dowel ends positioned over the recesses in the first slab. Once in place, recessed cavities are filled with high strength grout.

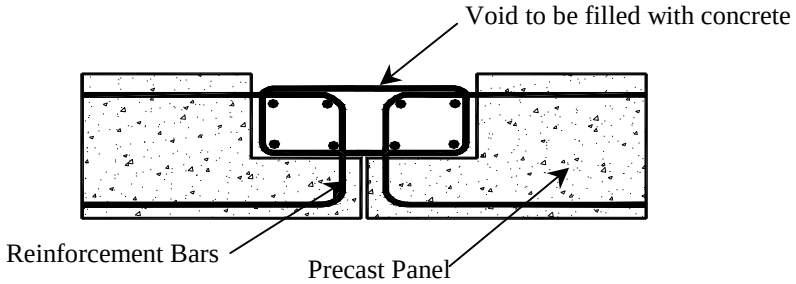

Figure 6 – Joint detail for conventional precast panel (Ref. 2)

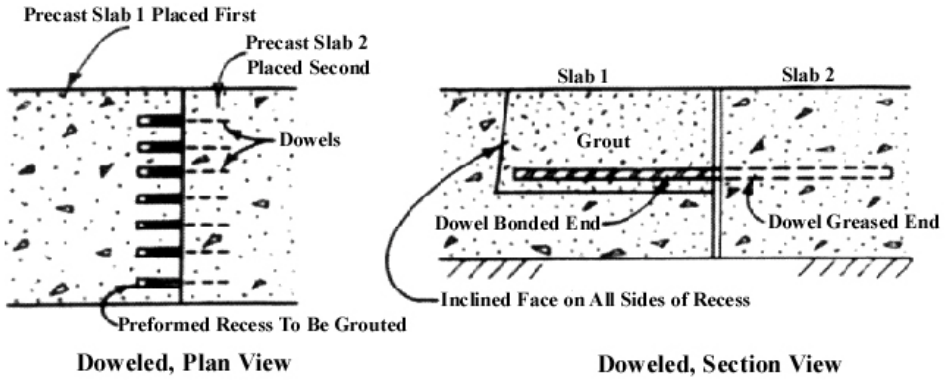

Figure 7 – Joint detail for doweled connection for conventional precast panels (Ref. 5)

Other Precast Paving Approaches

Figure 8 represents a waffle panel system used for precast paving. In this project, slabs were 2.7 m wide, 30 cm long, 13.7 cm thick at ribs and 6.9 m thick between ribs. Slabs were pre-tensioned transversely during fabrication and post tensioned longitudinally with cable or rod after slabs were set in place. Testing resulted in failures over the thinned sections of the slabs after only a few repetitions of loading. Some of the post tensioning cables and rods lost up to 17% of prestress under traffic loading.

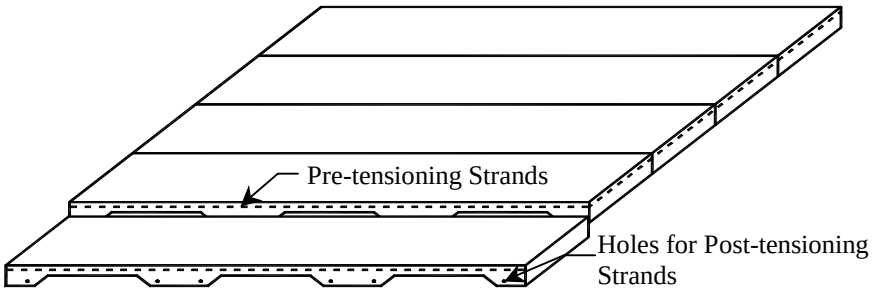

Figure 8 – Waffle Panel System (Ref. 1)

PRECAST PAVING DESIGN APPROACHES FOR LGA

Based on the result of the literature search and discussions within the project team, two precast paving approaches were identified for possible application at LGA. These approaches are as follows:

1) The modified post-tensioned approach
2) The conventional design approach.

In the post-tensioned approach, a series of slab panels are tied together using post-tensioning to reduce the number of active joints and to allow a reduction in design slab thickness. The

prestress that is applied effectively increases the flexural capacity (strength) of the concrete. In the conventional approach, each slab panel is designed to accommodate traffic loading based on concrete's flexural strength only. For both approaches, the required thicknesses were computed using the Federal Aviation Administration's layered elastic and standard design approaches as appropriate. For the post tensioned approach, benefits of the prestressing are considered by adding effective compressive stresses induced in the slab to the concrete flexural strength.

Precast Panel Construction Requirements

For both approaches, many of the panel construction requirements are very similar. These requirements include the following:

1. Concrete quality – Concrete used will meet all the applicable requirements of paving concrete. A higher strength concrete may be used if desired.
2. Panel dimensions – Panel dimensions will be dictated by plant and transportation related constraints. Panels used for the post-tensioning approach can be thinner.
3. Jointing – Dowel bars are used at active joints to provide load transfer at these joints. Typically, dowel bars are pre-installed (embedded) along a joint in a slab on one side of the active joint and slots are provided along the matching joint face of the adjacent slab panel. After the slabs are installed at the site, the slots are back-filled with a fast setting, high strength patching material. The dowel bars and the matching slots are spaced at 30.5 cm. Dowel bars should be at least 45.7 cm long and 3.8 to 5.1 cm. in diameter.
4. Reinforcement/prestressing for transport and handling – A minimal amount of prestressing or other reinforcement may be used to facilitate handling and transport of individual slab panels.
5. Handling and transportation to the site: These requirements would be the same for both approaches. At the site, cranes will be used to position/place the precast slabs on to the prepared base.
6. Existing pavement removal and base preparation: These requirements would be the same for both approaches. The post-tensioned approach would require less thickness of the existing pavement to be removed. The precast slabs may be placed over a high early strength bedding grout, about 2.54 cm. thick, or over a finely graded base surface.

Modified Post-tensioned Approach

For the post-tensioned approach, a somewhat modified procedure to the normal post-tension method was identified. The procedure described allows for the post-tensioning to be performed at a location near but not directly at the repair site. Prestressing will be performed at fabrication and will strengthen the slabs for handling and transportation. Then, post-tensioning is performed near the job site but not necessarily at the location of the repair. This allows for a better and more controlled construction environment and also has minimal impact to the construction timing. One of the criticisms of the post-tensioned approach is that it requires extremely tight tolerances during construction. Slight deviations during construction can have major implications to the effectiveness of the panel system. The modified post-tensioning approach recommended in this

report mitigates these problems by limiting the post-tensioning activities to a strictly controlled environment.

The approach is a modification of a similar installation demonstrated recently at Lambert Field in St. Louis, MO (Ref. 15). In that study, two 3.8 m by 7.6 m by 25.4 cm slabs were pre-fabricated and transported to the job site. Once on-site, the two slab panels were post-tensioned together prior to placement in the pavement cut. Following post-tensioning, slabs were lowered onto a grout bed with a crane and seated to final elevation using a small vibrating roller. While this was a limited study, its apparent success gives the process credibility for use on a larger scale project such as the one planned for LGA. As part of this approach, four precast panels will be tied together with post-tensioning near but not at the paving site. Then, the four-panel configuration will be transported to the paving site where it will be placed and doweled together with other four-panel units.

The basic PCC slab will be a 3.8 m wide by 3.8 m long by 25.4 cm thick panel. Slabs will contain weep holes and have a rough underside to assist in seating the slab on the proposed grout bedding. In addition, post-tensioning ducts will be premolded into the slab at approximately 20.3 cm center to center and post-tensioning anchors, similar to the one shown in Figure 5, will be installed along with the ducts.

Individual panels can be transported to a staging area near the construction site. At this location, the proposed post-tensioning can take place. Four panels are tied together creating a 7.6 m by 7.6 m unit. In general, the staging area would have a flat surface that is conducive to the post-tensioning process. Slabs will be tied together in both directions utilizing standard post-tensioning techniques to an approximate level of 1,724 kPa. Once complete, the four panel systems, shown in Figure 9, can be set aside until they are needed during the actual paving operation.

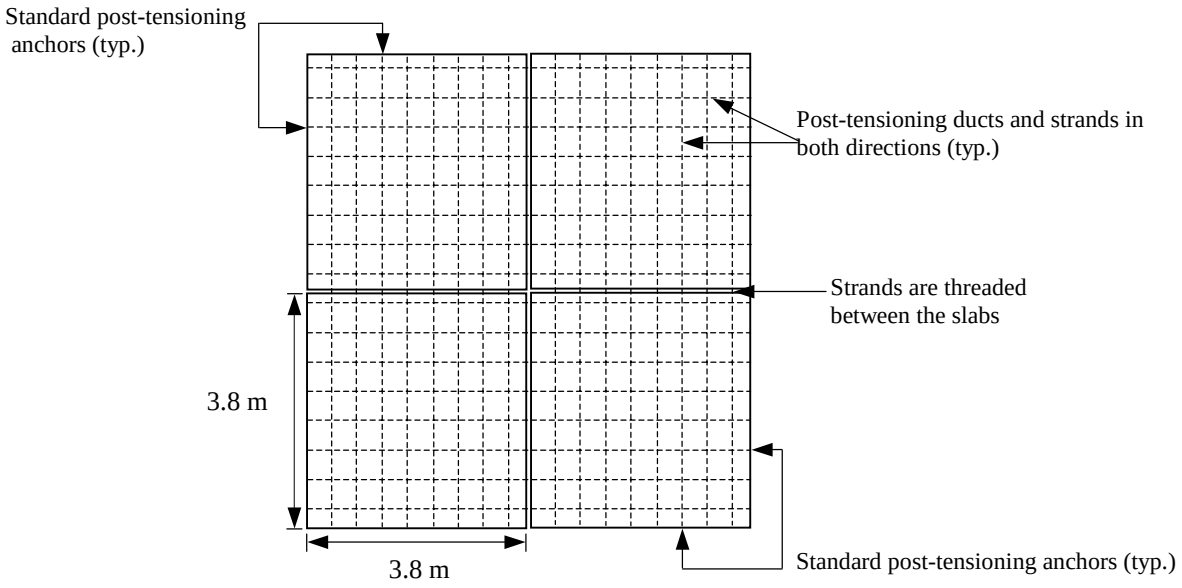

Figure 9 – Example of four-panel unit (Not to scale)

Preparation of the construction site will include milling and removal of the existing pavement to a depth of approximately 27.9-cm. A 2.54-cm layer of high early strength grout will be applied to the top of the milled surface and will form the bedding for the panel placement. The post-tensioned four-panel units will be transported to the site and lowered into place using an appropriate lifting crane. Leveling and aligning slabs will form an important task during construction. The four panel units will need to be vibrated into place to ensure proper doweled tie-ins to adjacent slabs.

Proposed connections to adjacent slabs will be made using a doweled approach similar to that shown in Figure 7 above. The slotted end of the slabs will be placed first, followed by the doweled end. Dowels will be 2.5 to 3.8 cm in diameter spaced at 30.5 cm on center. Once the slabs are linked, the slots will be filled with a fine aggregate high early strength grout.

Conventional Design Approach

The conventional precast paving system consists of interconnected series of precast concrete slabs. The system installation typically involves the following steps:

1. Transporting precast panels to the site
2. Removal of the old pavement.
3. Preparing the subgrade, subbase, and the base (as needed).
4. Covering the base with finely graded stone dust and grading it to within 3 mm of the required grade or using a grout as the bedding layer.
5. Installing the precast panels on the prepared base.
6. Interconnecting the slabs using a system of dowels and matching slots cast into the top or bottom of the slabs.
7. Grouting the dowel slots using a non-shrink grout.
8. Injecting bedding grout into specially designed grout distribution channel system in the precast slab panels to ensure full and complete bedding under the slab.

Slab Design Details

The slab design details are identical with these for the post tensioned precast paving slab alternative. For airfield applications, the slab thickness will range from 38.1 to 43.2 cm. Various panel dimensions can also be accommodated. Use of panel dimensions of 3.8-m width and 4.9 to 7.7 m in length were recommended. Table 1 contains results of the design thickness calculations for this method based on the respective facility, underlying pavement conditions and traffic parameters. The panel length to be used may be dictated by the contractor's plant and shipping constraints.

Aircraft	Support Structure			PCC Thickness (cm)	
	Modulus of Rupture (kPa)	Base	K_{sg} MN/m^3	Critical Areas	Non Critical Areas
B727-200	4,826	*DGA = 15.2 cm	38	45.7	40.6
		**AC = 15.2 cm	38	44.5	39.4
	5,516	DGA = 19.1 cm	38	40.6	36.8
		AC = 15.2 cm	38	40.6	35.6
	6,205	DGA = 15.2 cm	38	38.1	34.3
		AC = 15.2 cm	38	36.8	33.0
B767-400ER	4,826	AC = 15.2 cm	38	44.5	40.6
		DGA = 12.7 cm	38	48.3	43.2
	5,516	AC base = 15.2 cm	38	40.6	35.6
		DGA Base = 17.8 cm	38	41.9	38.1
	6,205	DGA = 17.8 cm	38	38.1	34.3
		AC base = 15.2 cm	38	36.8	33.0

Notes - *DGA = Dense Graded Aggregate
** AC = Asphalt Concrete

Table 1 - Conventional Approach Thickness Design (1 million coverages)

Because many conventional precast paving systems are proprietary systems, it is expected that many technical details related to design and specifications, including QA/QC requirements, will need to be developed jointly with representatives of the PANY/NJ and individual contractors. One recommendation that was proposed is that the dowel slots be placed at the surface of the slabs instead of at the bottom. Also, specific attention will need to be paid to develop an effective jointing and load transfer system along the interior longitudinal joints.

An example of the conventional precast paving system is the Super Slab system developed by the Fort Miller Co., Inc. (FMC), Schaglerville, New York. With this system, the base is covered with finely graded stone dust that is graded to within 3 mm of the required grade using a specially designed laser screed.

CONSTRUCTABILITY

General

Constructability of each alternative was evaluated by developing timelines for a typical project. Paving Taxiway 'A' at LGA was chosen as a typical precast paving project. The project evaluated includes:

- Paving the center 15.2-m (keel) of the taxiway, with precast concrete, and resurfacing the remaining 7.6 m of taxiway with asphalt concrete.
- Closing the work area for paving, for a 54-hour duration (over weekends).
- Performing lighting, permanent painting and joint sealing work during 6-hour nightly taxiway closures.

Both alternatives require the use of cranes to move the precast panels. Crane height and runway operations will require careful evaluation during final design development.

Construction Timeline for the Post-Tensioned Panel Approach.

During a 54-hour closure it is estimated that about 137 m of a taxiway (15.2 m wide) can be paved and reopened to traffic. Taxiway lighting is restored during subsequent nighttime closures following the 54-hour closures. This alternative requires an area where precast slabs can be stored and assembled into 7.6- m by 7.6-m post-tensioned units.

Construction Timeline for the Conventional Precast Approach.

During a 54-hour closure, it is estimated that 106 m of a taxiway (15.2 m wide) can be paved and reopened to traffic using the conventional precast approach. Taxiway lighting is restored during subsequent 54-hour closures. This alternative also requires an area where precast slabs can be stored prior to installation.

Comparison with Asphalt Concrete

During 2000, Taxiway 'B' at LaGuardia Airport was resurfaced. The design included removing the existing asphalt concrete to a depth of 45.7 cm within the center 15.2-m of the taxiway and repaving with modified asphalt concrete. The work was performed during 54-hour closures of the taxiway. Approximately 152 m of taxiway was paved during each 54-hour closure. The estimated production rate of precast paving at up to 137.2 m per 54-hour closure compares favorably with the asphalt concrete alternative.

COST ANALYSIS

Initial Cost

The construction cost estimates for the initial construction of the typical taxiway projects described are $350 per square meter for the conventional precast alternate and $318 per square meter for the post-tensioned precast alternate. These estimates include a 20 percent contingency. Taxiway lighting costs are not included. The initial costs are significantly higher than the cost of paving with asphalt concrete (lighting not included) which was estimated at $156 per square meter, including a 20 percent project contingency.

Life Cycle Cost Estimates

Table 2 is a life cycle cost comparison between the precast alternatives and the asphalt concrete alternative. All costs are in year 2001 dollars and include a 20 percent contingency. User costs of the airlines and the cost of money are not included. Over 40 years, the cost of the precast paving is significantly cheaper than the asphalt concrete – 43 to 48 percent. The precast alternates are expected to require fewer taxiway closures, than the asphalt concrete alternative over a 40-year life cycle.

	Asphalt Concrete		**Post-tensioned Precast**		**Conventional Precast**	
Year	Treatment	Cost $/m^2	Treatment	Cost $/m^2	Treatment	Cost $/m^2
0	Initial Construction	156.08	Initial Construction	317.54	Initial Construction	349.83
5	Sealcoat	3.23	Sealcoat	1.08	Sealcoat	1.08
8	Remove and replace 6” asphalt concrete in keel, 3” elsewhere	43.06				
13	Sealcoat	3.23	Remove and replace 3” asphalt concrete outside keel	16.15	Remove and replace 3” asphalt concrete outside keel	16.15
15			Seal joints	5.38	Seal joints	5.38
16	Remove and replace 6”asphalt concrete in keel, 3” elsewhere	43.06				
18			sealcoat	1.08	sealcoat	1.08
21	Sealcoat	3.23				
24	Repeat initial construction	156.08				
26			Remove and replace 3” asphalt concrete outside keel	16.15	Remove and replace 3” asphalt concrete outside keel	16.15
29	Sealcoat	3.23				
30			Seal joints	5.38	Seal joints	5.38
31			Seal coat	1.08	Seal coat	1.08
32	Remove and replace 6” asphalt concrete in keel, 3” elsewhere	43.06				
37	Sealcoat	3.23				
40	Salvage	37.67	Salvage	145.31	Salvage	156.08
	Total Cost =	**$419.82**	**Total Cost =**	**$218.54**	**Total Cost =**	**$249.73**

Table 2 – 40 Year Life-Cycle Cost Comparison

SUMMARY

The literature researched indicated that precast concrete pavement is a feasible alternative for rapid turn-around paving of taxiways and aircraft aprons at busy airfields. Two approaches that show promise are conventional and post-tensioned precast paving. Both systems require careful consideration in developing design details.

Viability of the precast construction procedure is also enhanced by consideration of the expected construction rate. During a 54-hour work period, it is estimated that up to 137 m of a given taxiway can be paved with the precast panels. This compares favorably to 152 m of taxiway of production using asphalt concrete mill and replace technique at LGA. Although there are clearly significantly more pre-construction activities necessary as part of the precast panel project, these efforts have no effect on aircraft operations. Therefore, they are not a detriment to consideration of precast paving as a workable alternative.

A cost analysis indicated that costs are indeed a major consideration in determining precast panel feasibility. Clearly both precast procedures have much higher initial costs. Upon further review of costs on a life-cycle basis, however, it was concluded that precast paving offers considerable savings.

It is planned to construct an approximately two 30 m long by 15 m wide test sections on an active taxiway at LGA during the Fall of 2001. The test pavement will include a 30-m long by 15-m wide conventional precast section and a 30-m long by 15-m wide prestressed precast section. As of the writing of this paper, the contract to construct this test project has been awarded and the contractor is preparing shop drawings.

Construction Project Update

As of the printing of the final paper, a number of changes have been made in both the modified post tension and conventional approaches. In general, these adjustments have been made to improve constructability and serviceability of the pavement systems. The most significant changes have occurred in the modified post tension approach in which we have increased the slab thickness to 30.5 cm and the slab dimensions to 3.8 m by 7.6 m. Many of the design details continue to change as contractors submit shop drawings for Port Authority review and approval. For this reason, we have elected not to include the details at this point. Our presentation will include the latest information on design details and, hopefully, on review of construction activities regarding the completed test site.

ACKNOWLEDGEMENT

The feasibility study reported here was sponsored by The Port Authority of New York and New Jersey. The Port Authority's support for this study is gratefully acknowledged. The views and opinions presented here are those of the authors and not of the Port Authority

Appendix A - References

1. Bull, John W., ed., "Precast Concrete Raft Units," 1991.
2. Merritt, David K., McCullough, B. Frank, Burns, Ned H., and Schindler, Anton K., "The Feasibility of Using Precast Concrete Panels to Expedite Highway Pavement Construction," A report prepared for Federal Highway Administration, February 2000.
3. Diaz, Alberto Mendoza, McCullough, B. Frank, and Burns, Ned H., "Design of the Texas Prestressed Concrete Pavement Overlays in Cooke and McLennan Counties and Construction of the McLennan County Project," A report for the Center for Transportation Research, Bureau of Engineering Research, University of Texas at Austin, February 1986.
4. Hana et al, "Long Term Performance of Prestressed Concrete Pavement in Japan," Purdue Conference on Concrete, Indiana 1997.
5. Rollings, Raymond S. and Yu T. Chou, "Precast Concrete Pavements," A report for the Office, Chief of Engineers, U.S. Army, November 1981.
6. Nussbaum, P.J., Friberg, B.F, Ciolko, A.T., and Tayabji, S.D., "Prestressed Pavement Volume 3, Construction Manual," A report prepared for Federal Highway Administration, June 1983.
7. Nussbaum, P.J., Tayabji, S.D., and Ciolko, A.T., "Prestressed Pavement Volume 1, Joint Design," A report prepared for Federal Highway Administration, June 1983.
8. Meyer, Alvin H., and B. F. McCullough, "Precast Repair of CRC Pavements," *Journal of Transportation Engineeringi*, Vol 109, No. 5, September 1983.
9. Tadros, Maher K., Badie, Sameh S., Baishya, Mantu C., and Yamane, Takashi, "Innovative Prestressed Concrete Bridge Deck Panel Systems," A technical report.
10. Culmo, Michael P., "Rapid Bridge Deck Replacement Using Full Depth Precast Concrete Slabs," Paper Number TRB 00-1220.
11. Cable, Neil D., McCullough, B. Frank, and Burns, Ned H., "New Concepts in Prestressed Concrete Pavement," *Transportation Research Record 1099*, Center for Transportation Research, Department of Civil Engineering, The University of Texas at Austin, Austin, Texas.
12. Drinkard, James L., "A Concrete Alternative to Runway Reconstruction," A technical report, Howard Needles Tammen & Bergendoff, Atlanta, Georgia.
13. Issa, Mohsen A., Yousif, Alfred A., Issa, Mahmoud A., Kaspar, Iraj I. And Khayyat, Salah Y., "Analysis of Full Depth Precast Concrete Bridge Deck Panels," *PCI Journal*, January-February 1998.
14. Elkins, Gary Eugene, McCullough, B. Frank, and Hudson, Ronald W., "Precast Repair of Continuously Reinforced Concrete Pavement," Research Report 177-15 for the Texas State Department of Highways and Public Transportation, May 1979.
15. Stein, Jeff, "Report on Pre-cast post-tensioned Slab Trial – Lambert Field, St. Louis, MO." University of Illinois, August 2000.